Lecture 10

2021/2022

Microwave Devices and Circuits for Radiocommunications

Exam

- Week 14, Monday 11-13, **P2? P6?**

2021/2022

- 2C/1L, **MDCR**
- **Attendance at minimum 7 sessions (course + laboratory)**
- Lectures- **associate professor Radu Damian**
  - Monday 11-13, **P8**, ~~Microsoft Teams~~
  - E – 50% final grade, room?
  - **problems** + (2p atten. lect.) + (3 tests) + (bonus activity)
    - first test L2: 28.02.2022 (t2 and t3 not announced)
    - 3p=+0.5p
  - **all materials/equipments authorized**

2021/2022

- Laboratory – **associate professor Radu Damian**
  - Thursday 16-18, II.13
  - Friday **8**-12, II.13, odd week
  - L – 25% final grade
    - ADS, 4 sessions
    - Attendance + personal results
  - P – 25% final grade
    - ADS, 3 sessions (-1? 25.02.2022)
    - personal homework

Materials

- RF-OPTO
  - **http://rf-opto.etti.tuiasi.ro**
- **David Pozar, "Microwave Engineering"**, Wiley; 4th edition , 2011
  - 1 exam problem ← Pozar
- Photos
  - sent by ~~email~~/online exam
  - used at lectures/laboratory

Profile photo

- Profile photo – online “exam”

Examene online: 2020/2021

Disciplina: MDC (Microwave Devices and Circuits (Engleza))

Pas 3

Nr.	Titlu	Start	Stop	Text
1	Profile photos	03/03/2021; 10:00	08/04/2021; 08:00	Online "exam" created f ..
2	Mini Test 1 (lecture 2)	03/03/2021; 15:35	03/03/2021; 15:50	The current test consis ..

Online

- access to **online exams** requires the **password** received by email

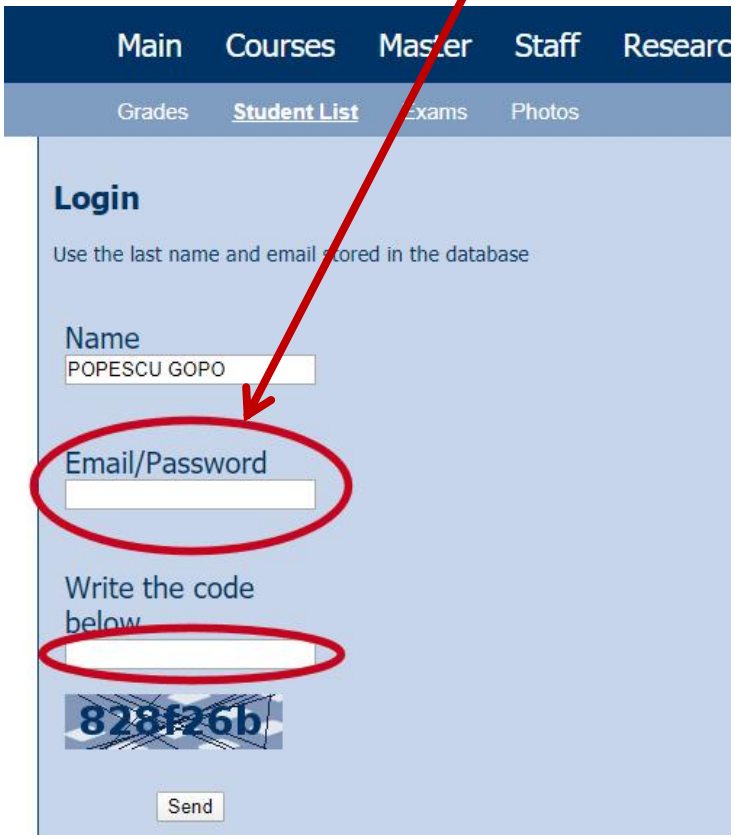

Online results submission

- many numerical values

Z1	Z2	Z3	Z4	Z5	Z6	Z7
148.33	155.88	202.12	164.35	180.91	30.29	185.19
26.97	153.5	34.64	35.79	55.56	26.212	10.693
0	0	0	0	0	0	0
50	50	50	50	50	50	50

√

✗

Online results submission

Grade = Quality of the work +

+ Quality of the submission

Important

The lossless line

- input impedance of a length ***l*** of transmission line with characteristic impedance $\boldsymbol{Z_o}$, loaded with an arbitrary impedance $\boldsymbol{Z_L}$

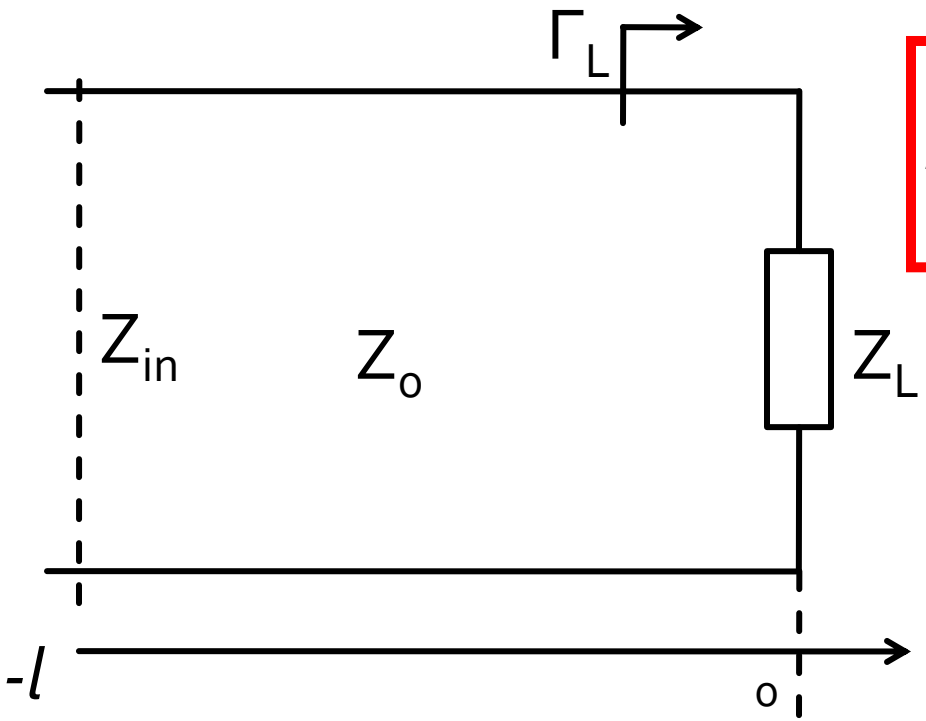

$$\boxed{Z_{in} = Z_0 \cdot \frac{Z_L + j \cdot Z_0 \cdot \tan\beta \cdot l}{Z_0 + j \cdot Z_L \cdot \tan\beta \cdot l}}$$

The lossless line

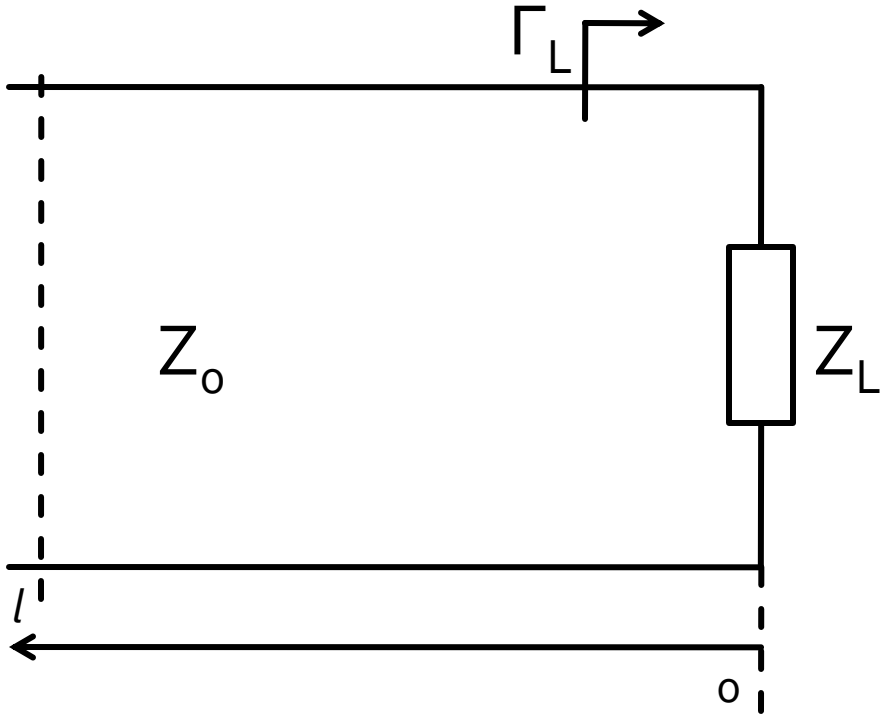

$$V(z) = V_0^+ e^{-j\cdot\beta\cdot z} + V_0^- e^{j\cdot\beta\cdot z}$$

$$I(z) = \frac{V_0^+}{Z_0} e^{-j\cdot\beta\cdot z} - \frac{V_0^-}{Z_0} e^{j\cdot\beta\cdot z}$$

$$Z_L = \frac{V(0)}{I(0)} \qquad Z_L = \frac{V_0^+ + V_0^-}{V_0^+ - V_0^-} \cdot Z_0$$

- voltage reflection coefficient

$$\boxed{\Gamma = \frac{V_0^-}{V_0^+} = \frac{Z_L - Z_0}{Z_L + Z_0}}$$

- Z_o real

The lossless line

$$V(z) = V_0^+ \cdot \left(e^{-j\cdot\beta\cdot z} + \Gamma \cdot e^{j\cdot\beta\cdot z}\right) \qquad I(z) = \frac{V_0^+}{Z_0} \cdot \left(e^{-j\cdot\beta\cdot z} - \Gamma \cdot e^{j\cdot\beta\cdot z}\right)$$

- time-average Power flow along the line

$$P_{avg} = \frac{1}{2} \cdot \mathrm{Re}\left\{V(z) \cdot I(z)^*\right\} = \frac{1}{2} \cdot \frac{\left|V_0^+\right|^2}{Z_0} \cdot \mathrm{Re}\left\{1 - \Gamma^* \cdot \underbrace{e^{-2j\cdot\beta\cdot z} + \Gamma \cdot e^{2j\cdot\beta\cdot z}}_{\left(z - z^*\right) = \mathrm{Im}} - \left|\Gamma\right|^2\right\}$$

$$P_{avg} = \frac{1}{2} \cdot \frac{\left|V_0^+\right|^2}{Z_0} \cdot \left(1 - \left|\Gamma\right|^2\right)$$

- Total power delivered to the load = Incident power – "Reflected" power
- Return "Loss" [dB] $\qquad \mathrm{RL} = -20 \cdot \log\left|\Gamma\right| \quad [\mathrm{dB}]$

Reflection and power / Model

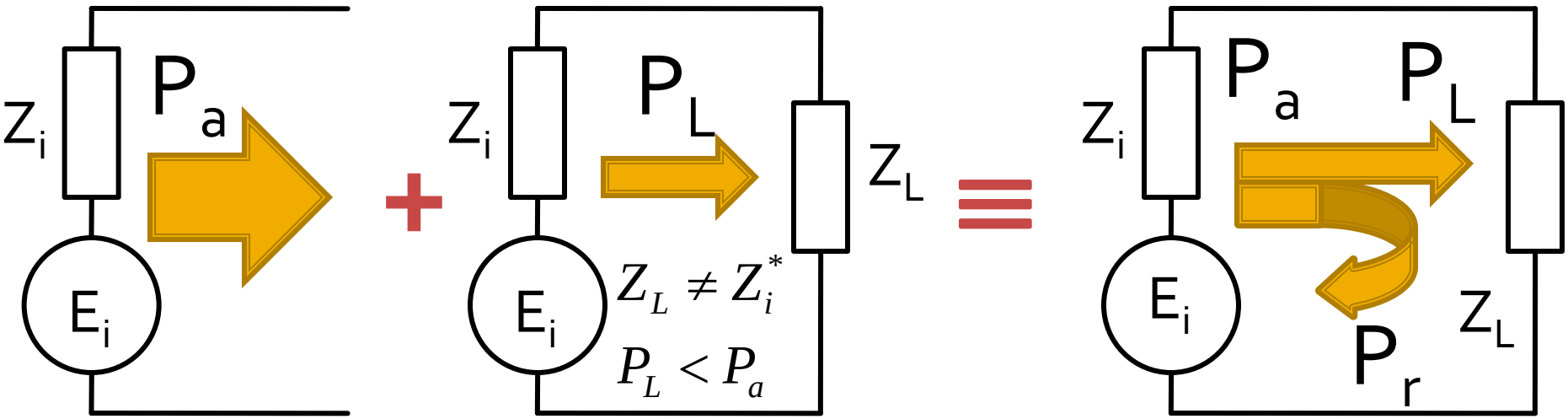

- The source has the ability to sent to the load a certain maximum power (available power) P_a
- For a particular load the power sent to the load is less than the maximum (mismatch) $P_L < P_a$
- The phenomenon is **"as if"** (model) some of the power is reflected $P_r = P_a - P_L$
- The power is a **scalar !**

Matching , from the point of view of power transmission

$$\boxed{Z_L = Z_i^*}$$

If we choose a real Zo

$$\Gamma = \frac{Z - Z_0}{Z + Z_0}$$

$$\boxed{\Gamma_L = \Gamma_i^*}$$

- complex numbers
- in the complex plane

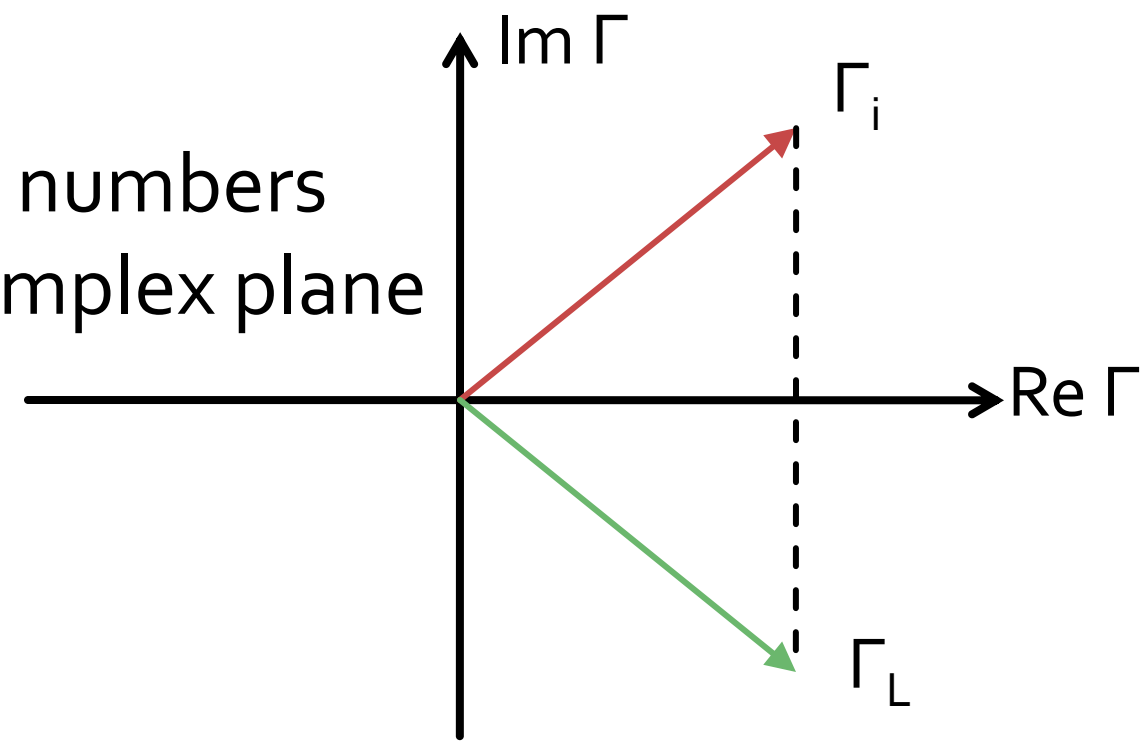

Scattering matrix – S

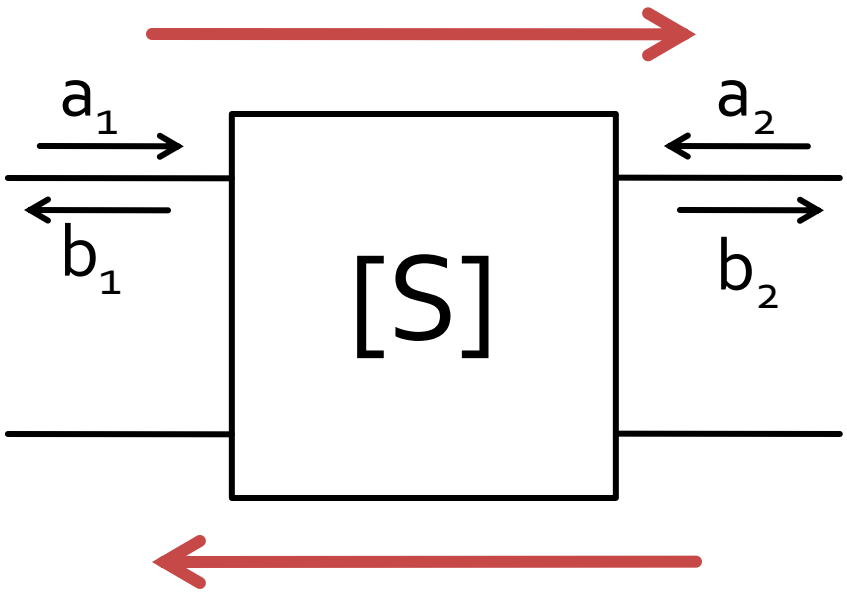

$$\begin{bmatrix} b_1 \\ b_2 \end{bmatrix} = \begin{bmatrix} S_{11} & S_{12} \\ S_{21} & S_{22} \end{bmatrix} \cdot \begin{bmatrix} a_1 \\ a_2 \end{bmatrix}$$

$$|S_{21}|^2 = \frac{Power\ in\ Z_0\ load}{Power\ \ from\ Z_0\ source}$$

- a,b
  - information about signal power **AND** signal phase
- S_{ij}
  - network effect (gain) over signal power **including** phase information

Impedance matching

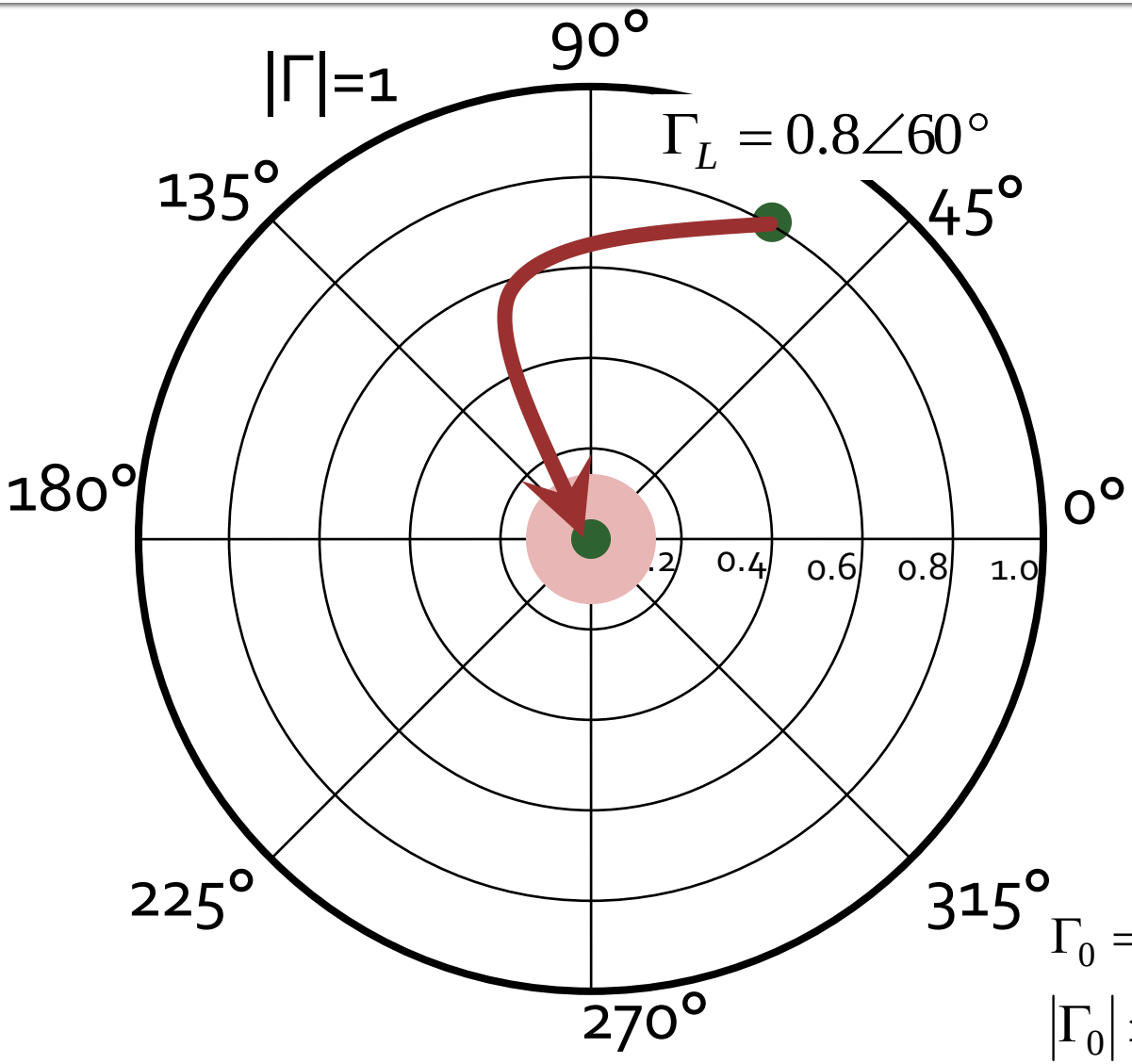

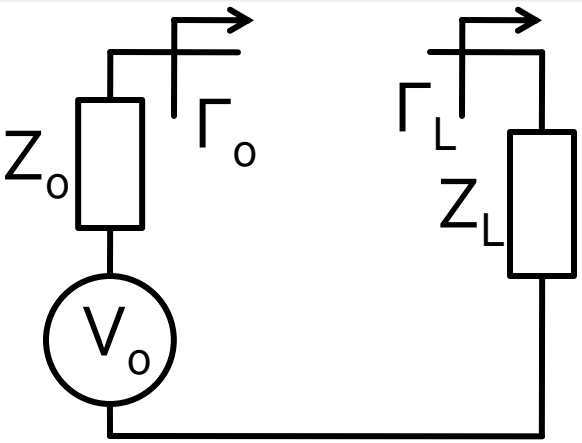

How?

$\Gamma_0 = 0$ perfect match

$|\Gamma_0| \le \Gamma_m$ "good enough" match

The Smith Chart

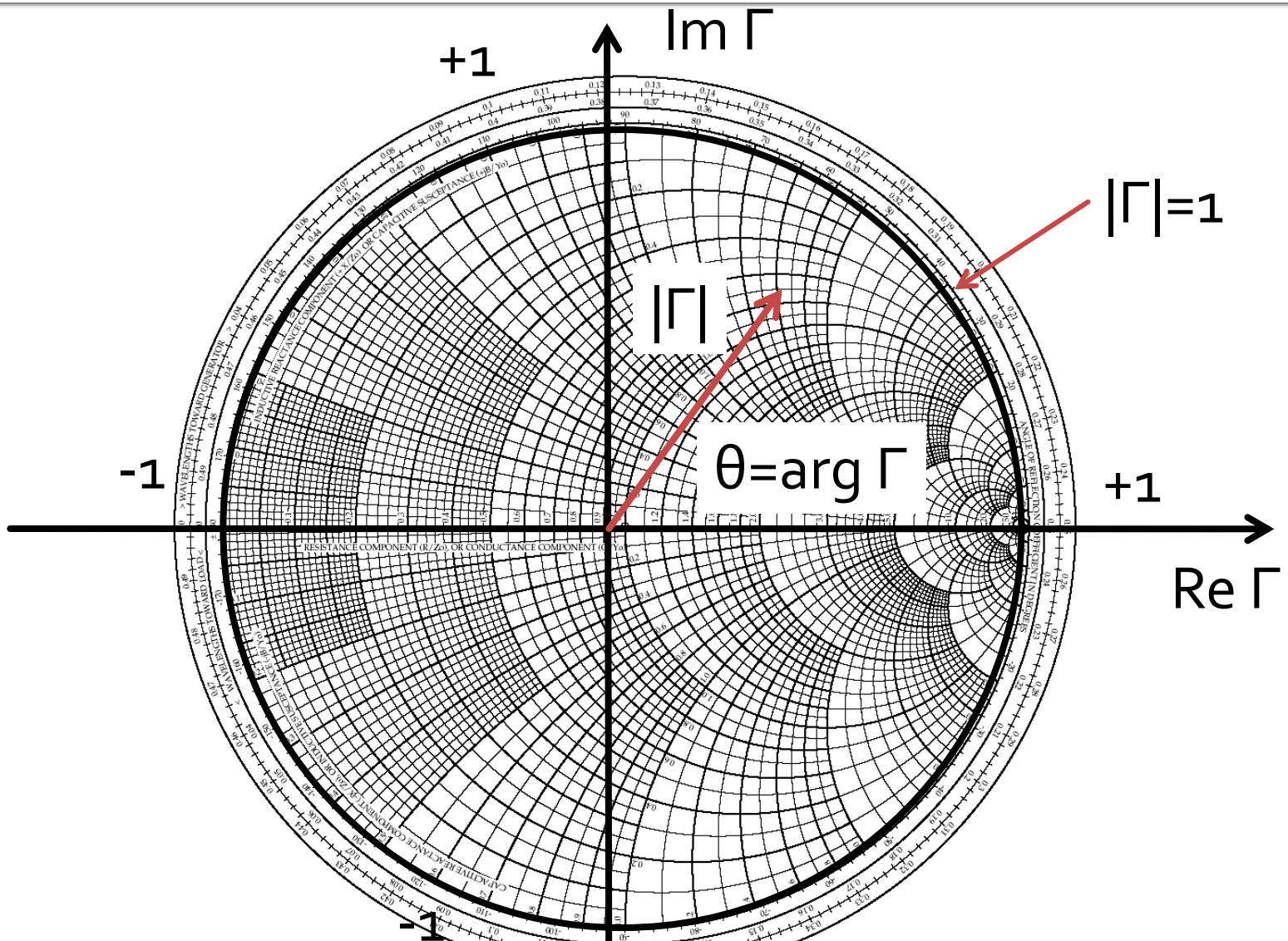

The Smith Chart

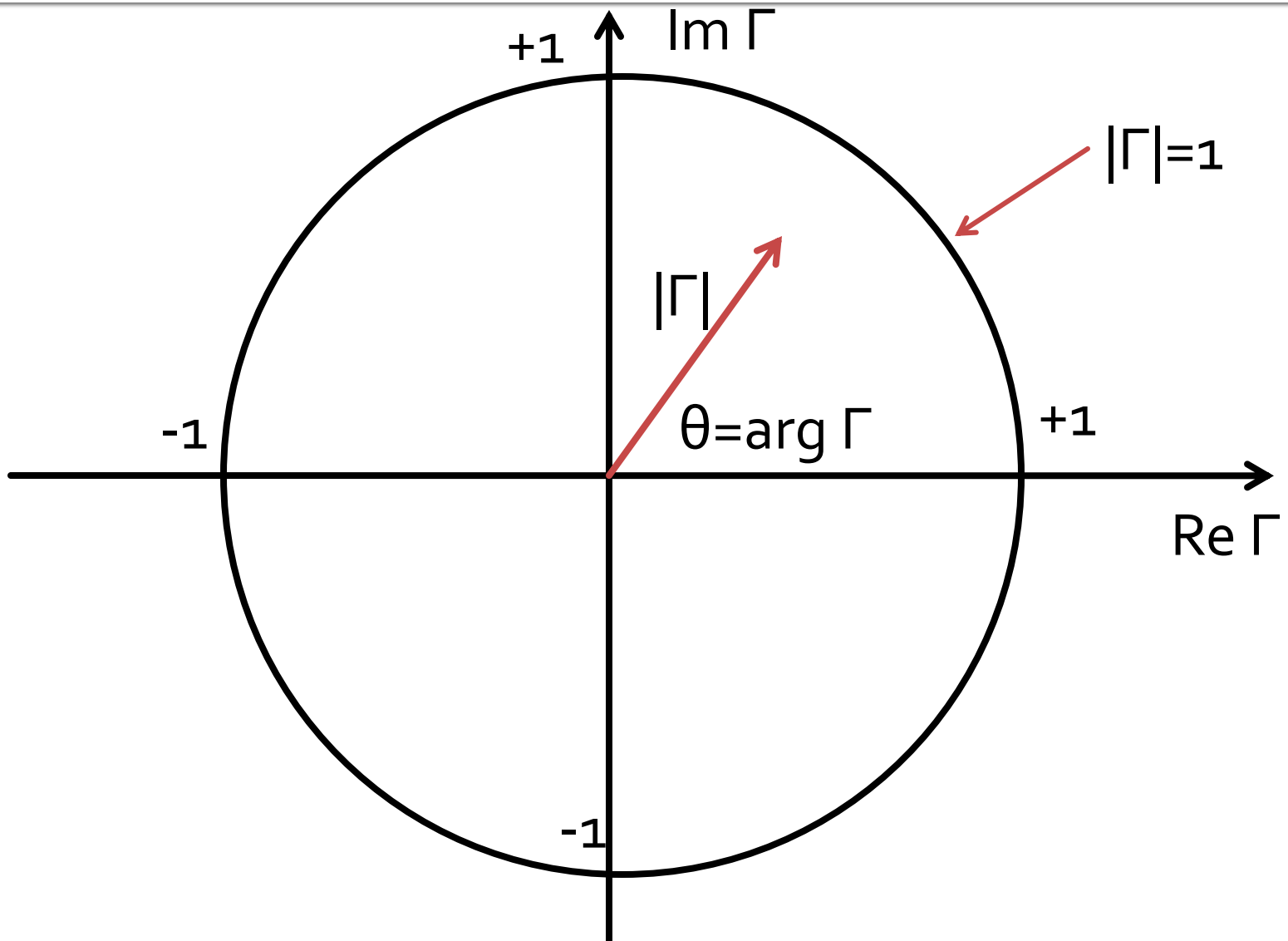

Impedance Matching

Impedance Matching with Stubs

Smith chart, r=1 and g=1

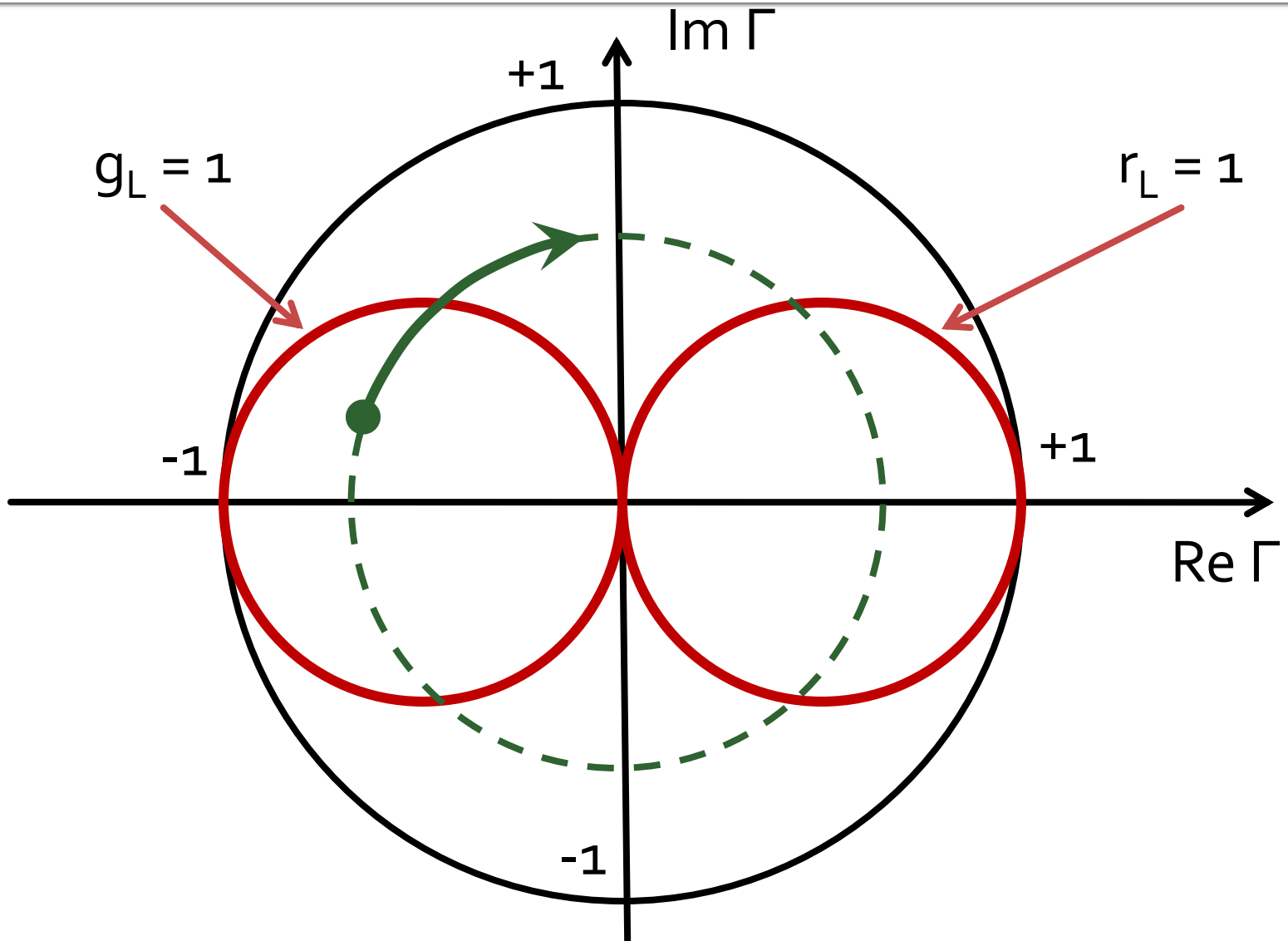

Impedance Matching with Stubs

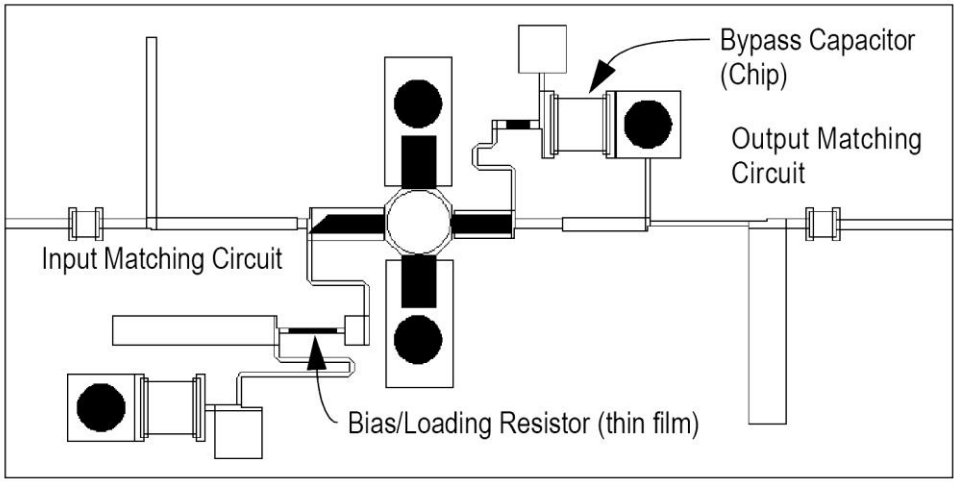

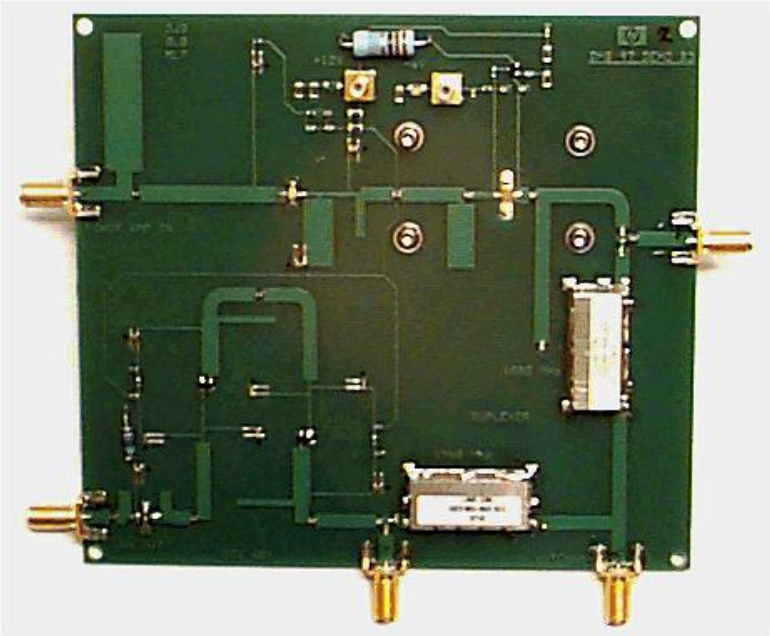

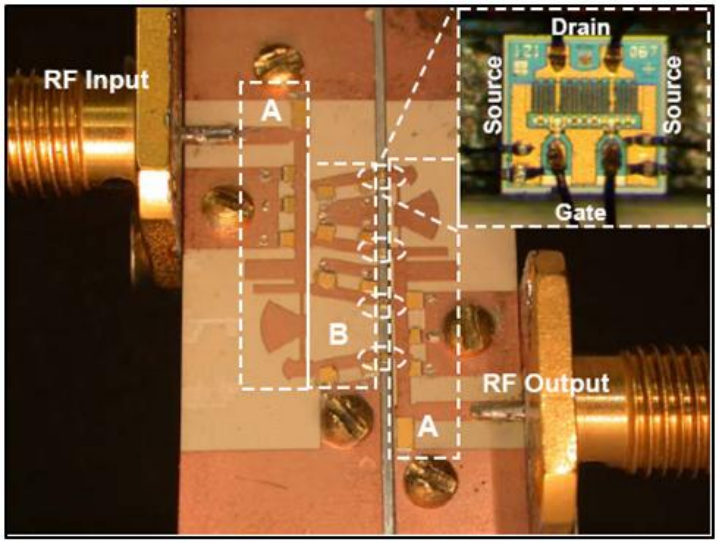

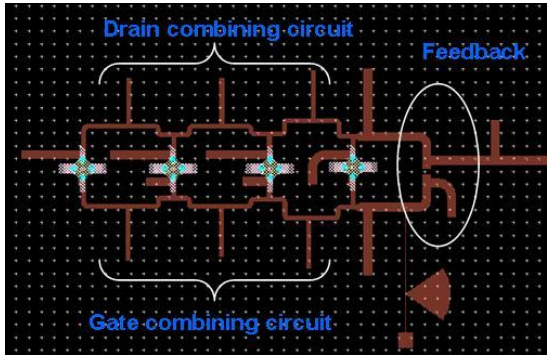

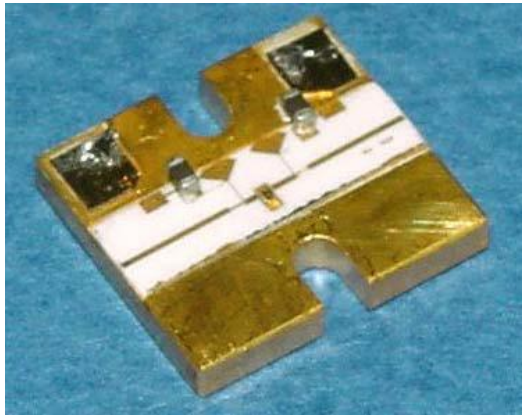

Analytical solutions

Exam / Project

Case 1, Shunt Stub

- Shunt Stub

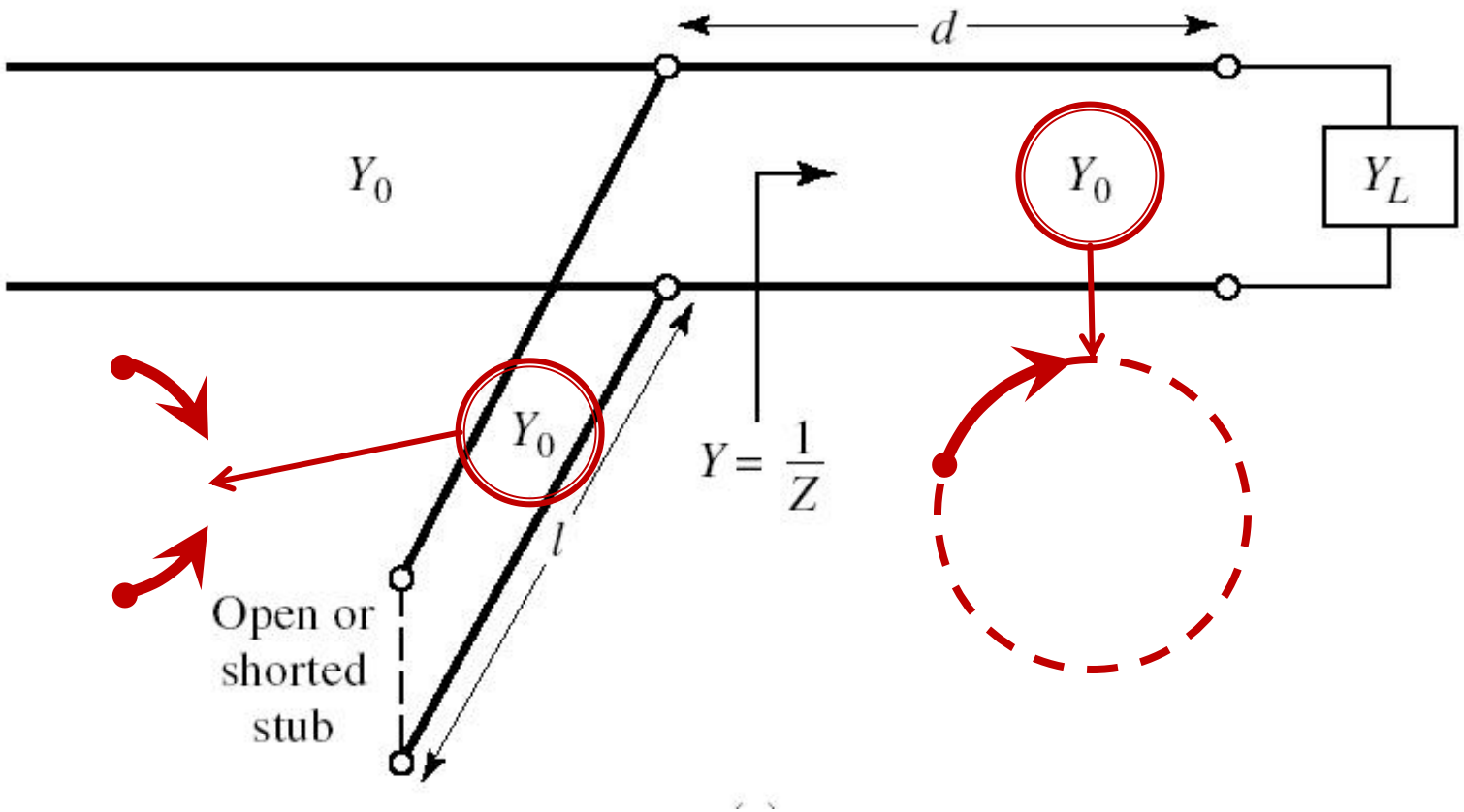

Analytical solution, usage

$$\boxed{\cos(\varphi + 2\theta) = -|\Gamma_S|}$$

$$\boxed{\theta_{sp} = \beta \cdot l = \tan^{-1} \frac{\mp 2 \cdot |\Gamma_S|}{\sqrt{1 - |\Gamma_S|^2}}}$$

$$\Gamma_S = 0.593 \angle 46.85°$$

$$|\Gamma_S| = 0.593; \quad \varphi = 46.85° \qquad \cos(\varphi + 2\theta) = -0.593 \Rightarrow (\varphi + 2\theta) = \pm 126.35°$$

- The **sign** (+/-) chosen for the **series line** equation imposes the **sign** used for the **shunt stub** equation
  - **"+" solution**

    $$(46.85° + 2\theta) = +126.35° \qquad \theta = +39.7° \qquad \operatorname{Im} y_S = \frac{-2 \cdot |\Gamma_S|}{\sqrt{1 - |\Gamma_S|^2}} = -1.472$$

    $$\theta_{sp} = \tan^{-1}(\operatorname{Im} y_S) = -55.8°(+180°) \rightarrow \theta_{sp} = 124.2°$$

  - **"-" solution**

    $$(46.85° + 2\theta) = -126.35° \qquad \theta = -86.6°(+180°) \rightarrow \theta = 93.4°$$

    $$\operatorname{Im} y_S = \frac{+2 \cdot |\Gamma_S|}{\sqrt{1 - |\Gamma_S|^2}} = +1.472 \qquad \theta_{sp} = \tan^{-1}(\operatorname{Im} y_S) = 55.8°$$

Case 2, Series Stub

- Series Stub
- difficult to realize in single conductor line technologies (microstrip)

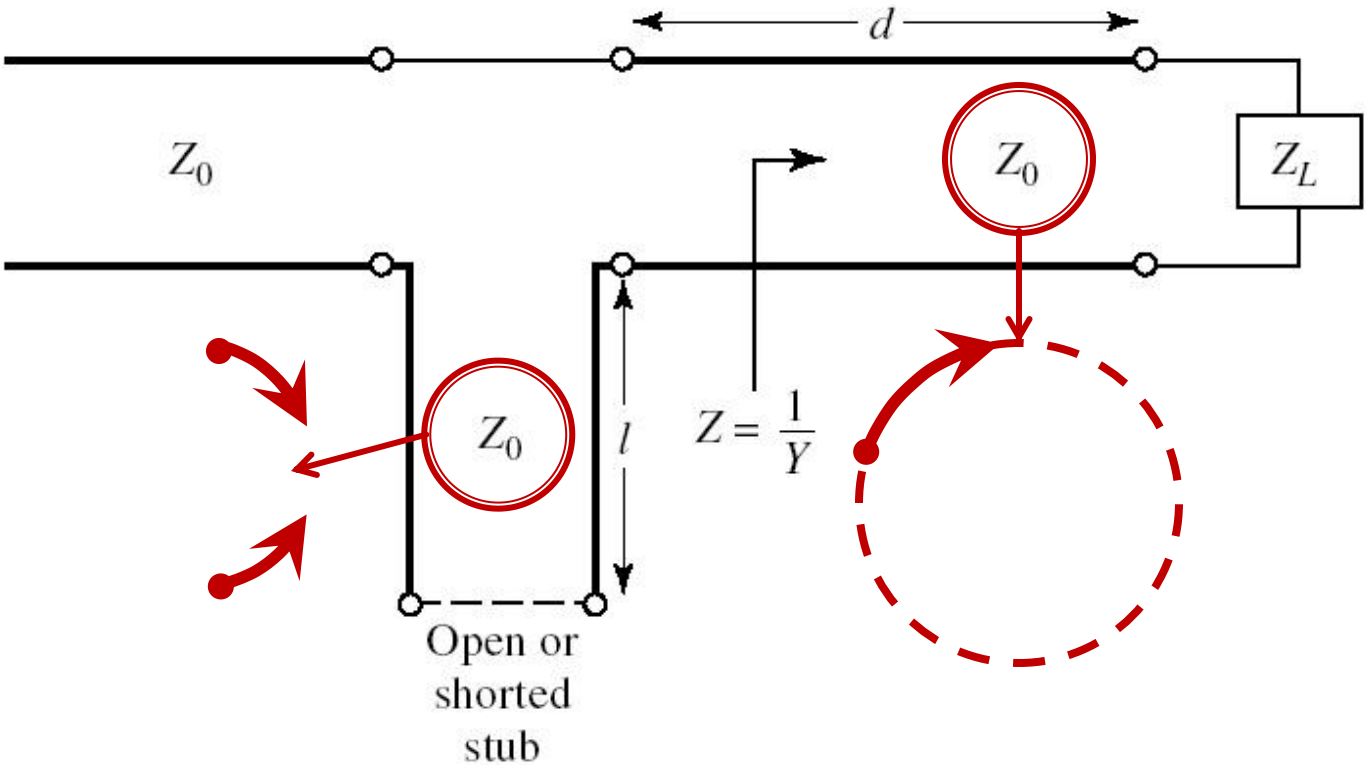

Analytical solution, usage

$$\boxed{\cos(\varphi+2\theta)=|\Gamma_S|}$$

$$\boxed{\theta_{ss}=\beta\cdot l=\cot^{-1}\frac{\mp 2\cdot|\Gamma_S|}{\sqrt{1-|\Gamma_S|^2}}}$$

$$\Gamma_S=0.555\angle-29.92^\circ$$

$$|\Gamma_S|=0.555;\quad \varphi=-29.92^\circ \qquad \cos(\varphi+2\theta)=0.555\Rightarrow(\varphi+2\theta)=\pm 56.28^\circ$$

- The **sign** (+/-) chosen for the **series line** equation imposes the **sign** used for the **series stub** equation
  - **"+" solution**

$$(-29.92^\circ+2\theta)=+56.28^\circ \qquad \theta=43.1^\circ \qquad \mathrm{Im}\,z_S=\frac{+2\cdot|\Gamma_S|}{\sqrt{1-|\Gamma_S|^2}}=+1.335$$

$$\theta_{ss}=-\cot^{-1}(\mathrm{Im}\,z_S)=-36.8^\circ(+180^\circ)\rightarrow\theta_{ss}=143.2^\circ$$

  - **"-" solution**

$$(-29.92^\circ+2\theta)=-56.28^\circ \qquad \theta=-13.2^\circ(+180^\circ)\rightarrow\theta=166.8^\circ$$

$$\mathrm{Im}\,z_S=\frac{-2\cdot|\Gamma_S|}{\sqrt{1-|\Gamma_S|^2}}=-1.335 \qquad \theta_{ss}=-\cot^{-1}(\mathrm{Im}\,z_S)=36.8^\circ$$

Microwave Amplifiers

Amplifier Power / Matching

- Two ports in which matching influences the power transfer

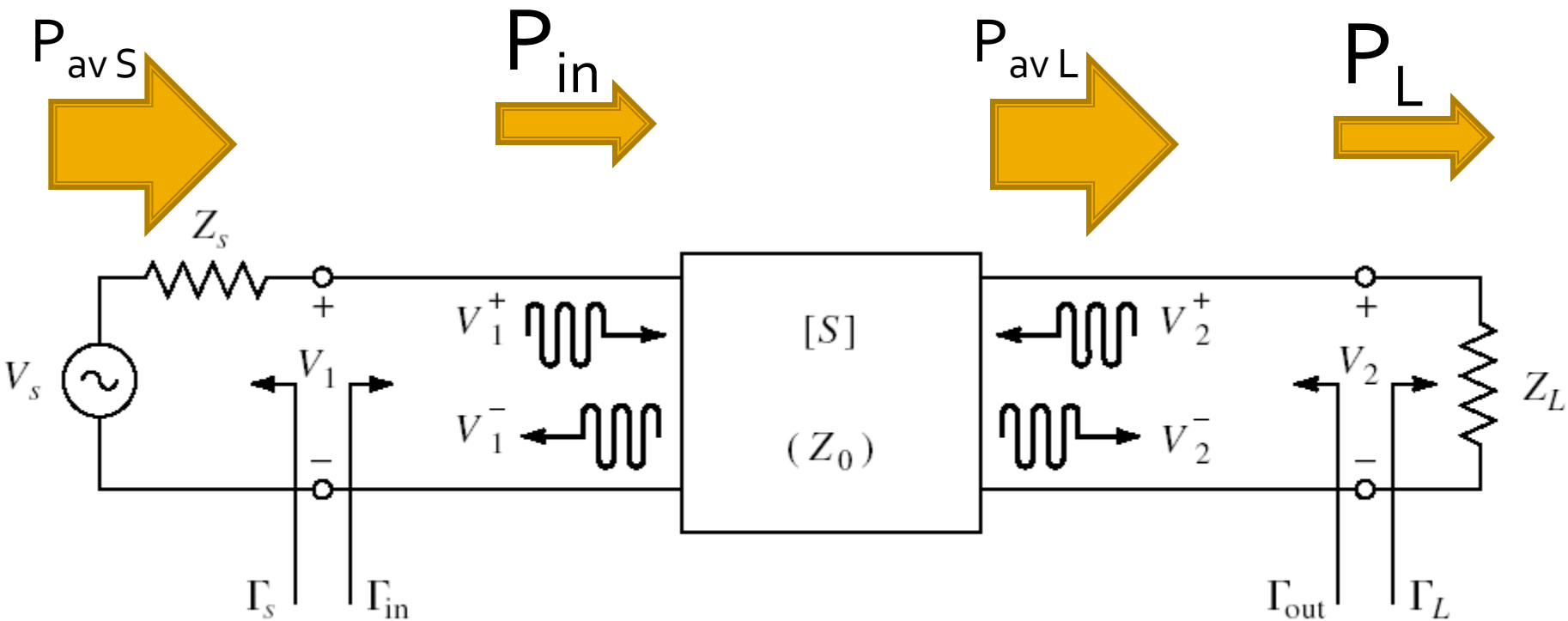

Amplifier as two-port

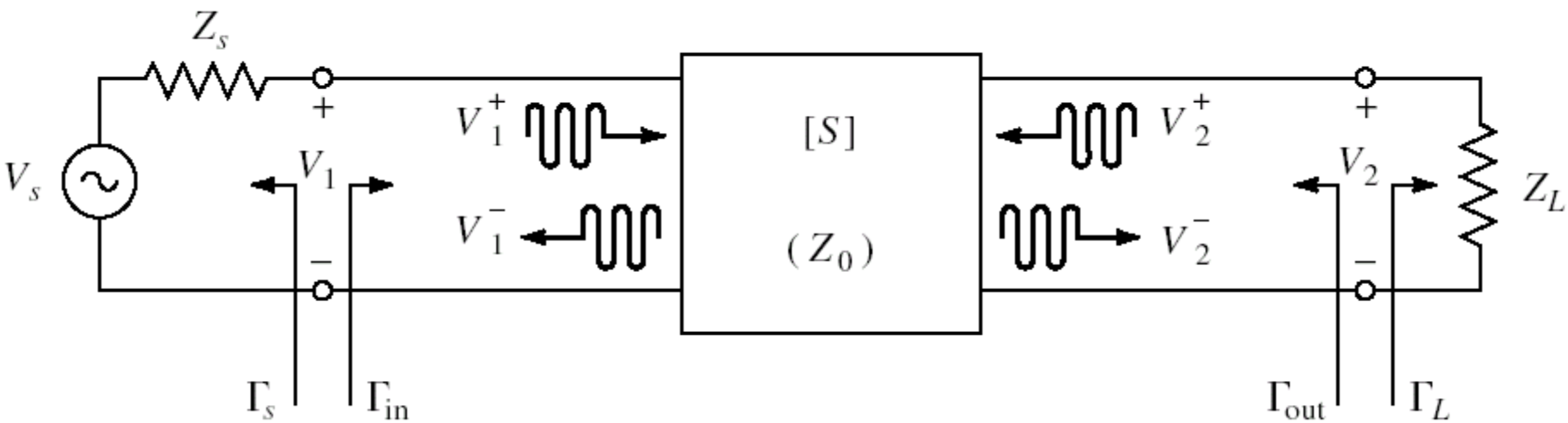

$$\Gamma_{in} = \frac{V_1^-}{V_1^+} = S_{11} + \frac{S_{12} \cdot S_{21} \cdot \Gamma_L}{1 - S_{22} \cdot \Gamma_L}$$

$$\Gamma_{out} = \frac{V_2^-}{V_2^+} = S_{22} + \frac{S_{12} \cdot S_{21} \cdot \Gamma_S}{1 - S_{11} \cdot \Gamma_S}$$

Input matching circuit

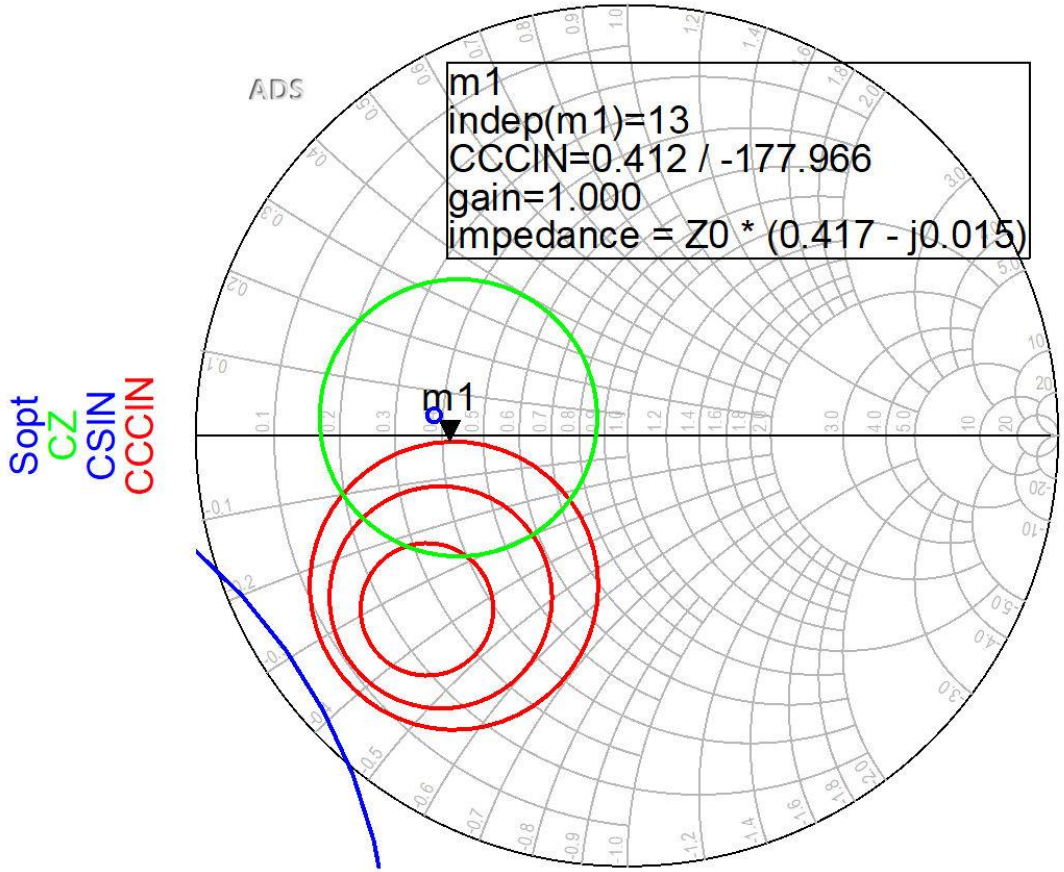

- If we can afford a 1.2dB decrease of the input gain for better NF,Q (Gs = 1 dB), position m1 above is better
- We obtain better (smaller) NF

Output matching circuit

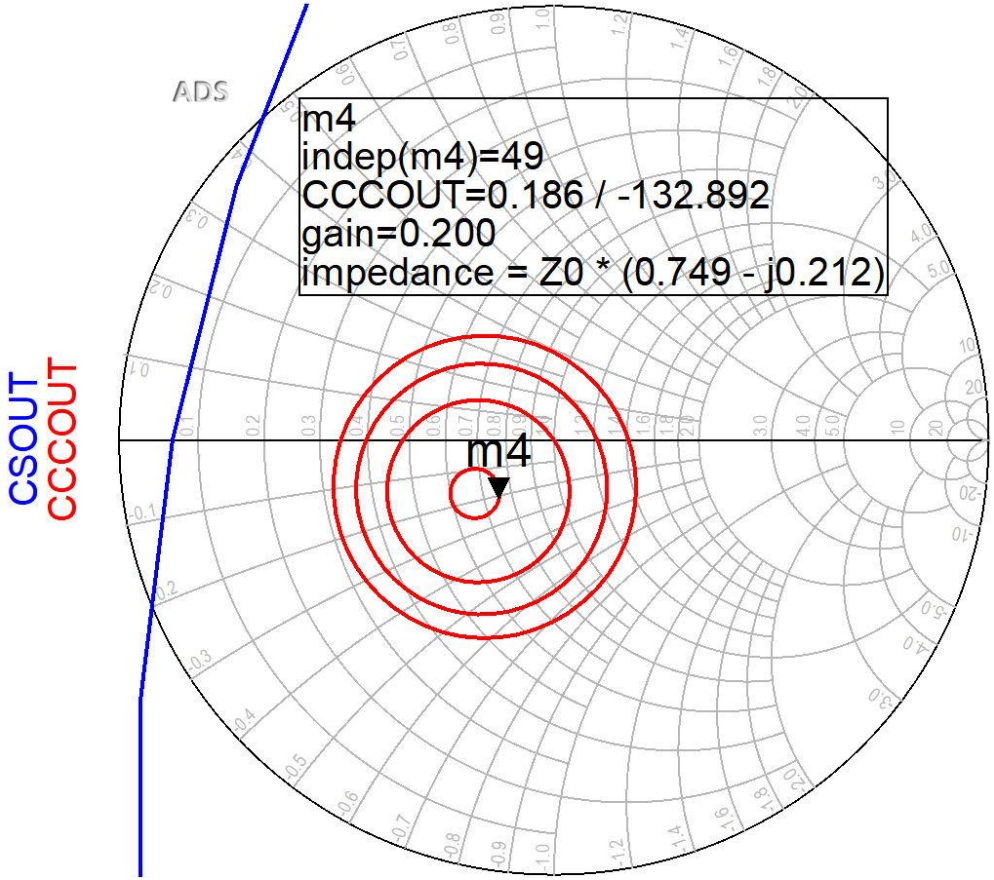

- output constant gain circles CCCOUT: -0.4dB, -0.2dB, 0dB, +0.2dB
- the lack of noise restrictions allows optimization for better gain (close to maximum – position m4)

The Smith Chart

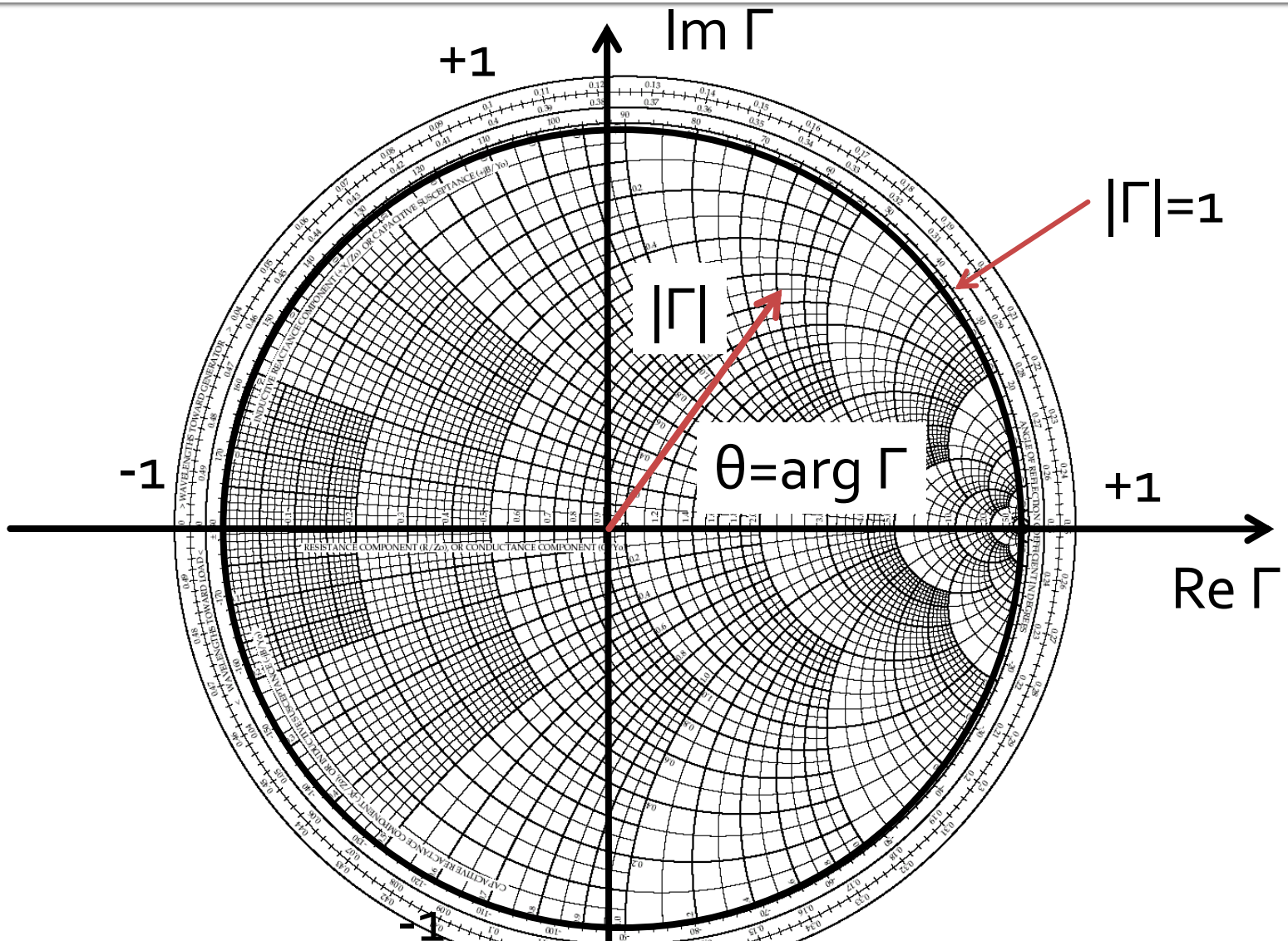

The Smith Chart

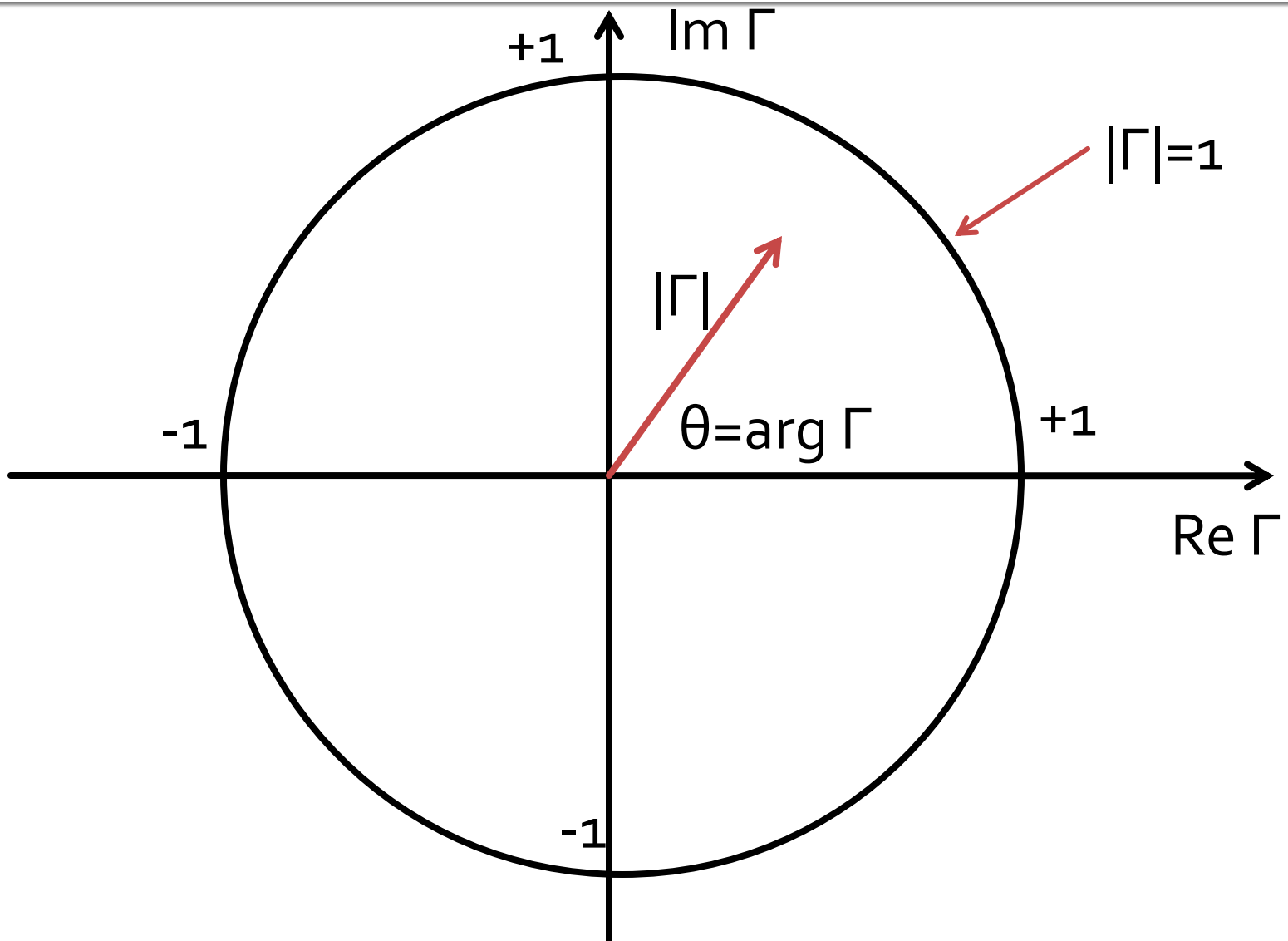

Microwave Amplifiers

Broadband amplifiers

Broadband/Wideband amplifiers

- Achieved by some design techniques (only at the expense of gain, complexity)
  1. Compensated matching networks
  2. Resistive matching networks
  3. Negative feedback
  4. Balanced amplifiers
  5. Distributed amplifiers
  6. Differential amplifiers

Balanced amplifiers

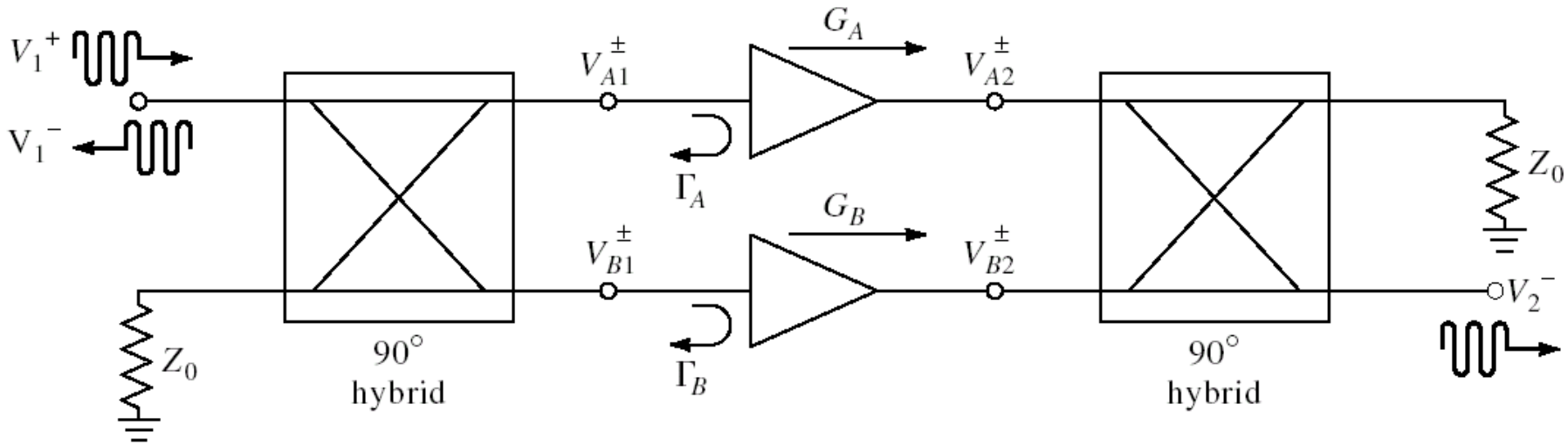

- two identical amplifiers with two hybrid couplers 3 dB / 90° to cancel input and output reflections

$$S_{21} = \frac{-j}{2} \cdot (G_A + G_B)$$

$$S_{11} = \frac{1}{2} \cdot (\Gamma_A - \Gamma_B)$$

$$F = \frac{1}{2} \cdot (F_A + F_B)$$

$$S_{21}\big|_{A=B} = -j \cdot G$$

$$S_{11}\big|_{A=B} = 0$$

Balanced amplifiers

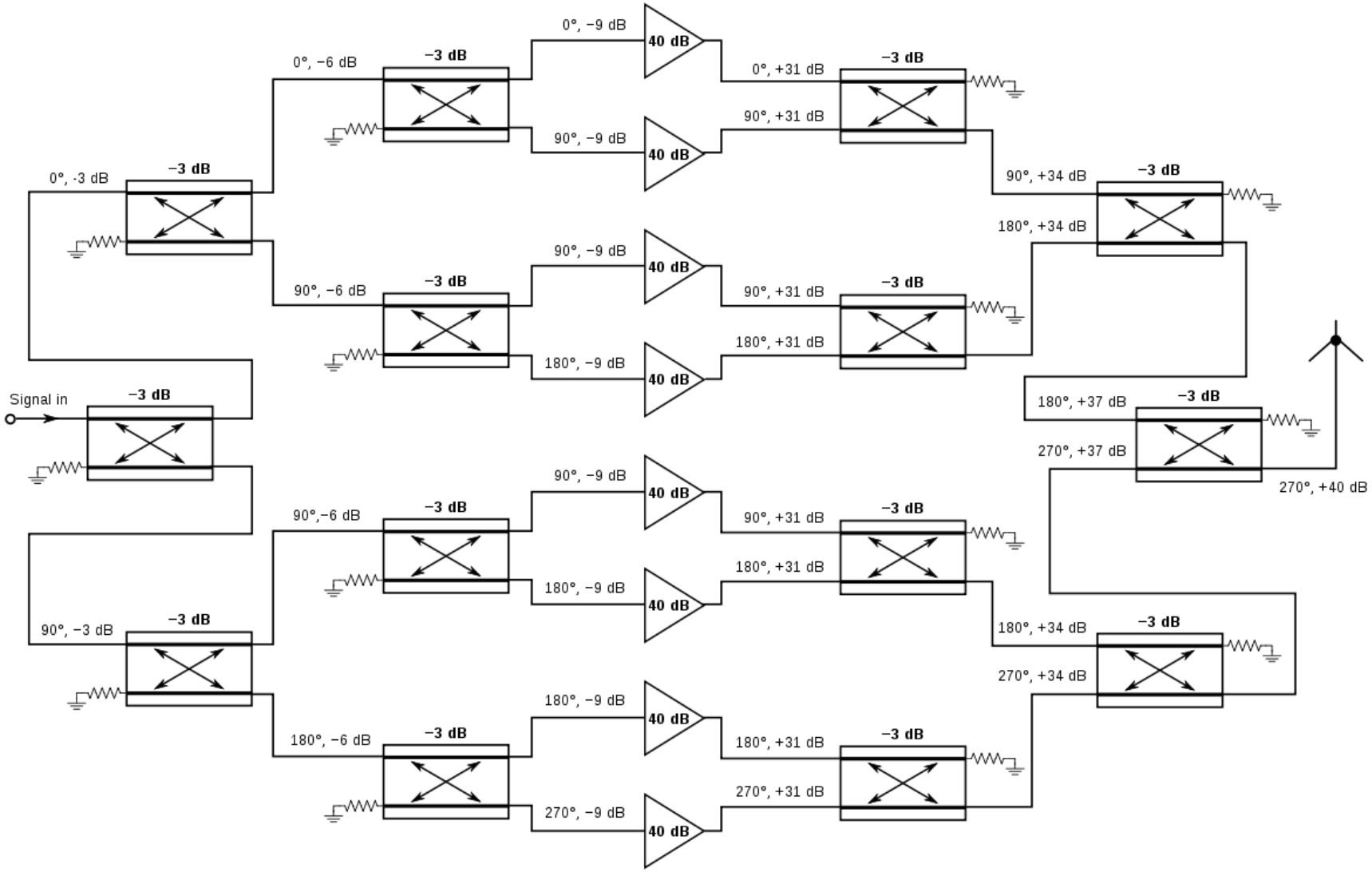

Distributed amplifiers

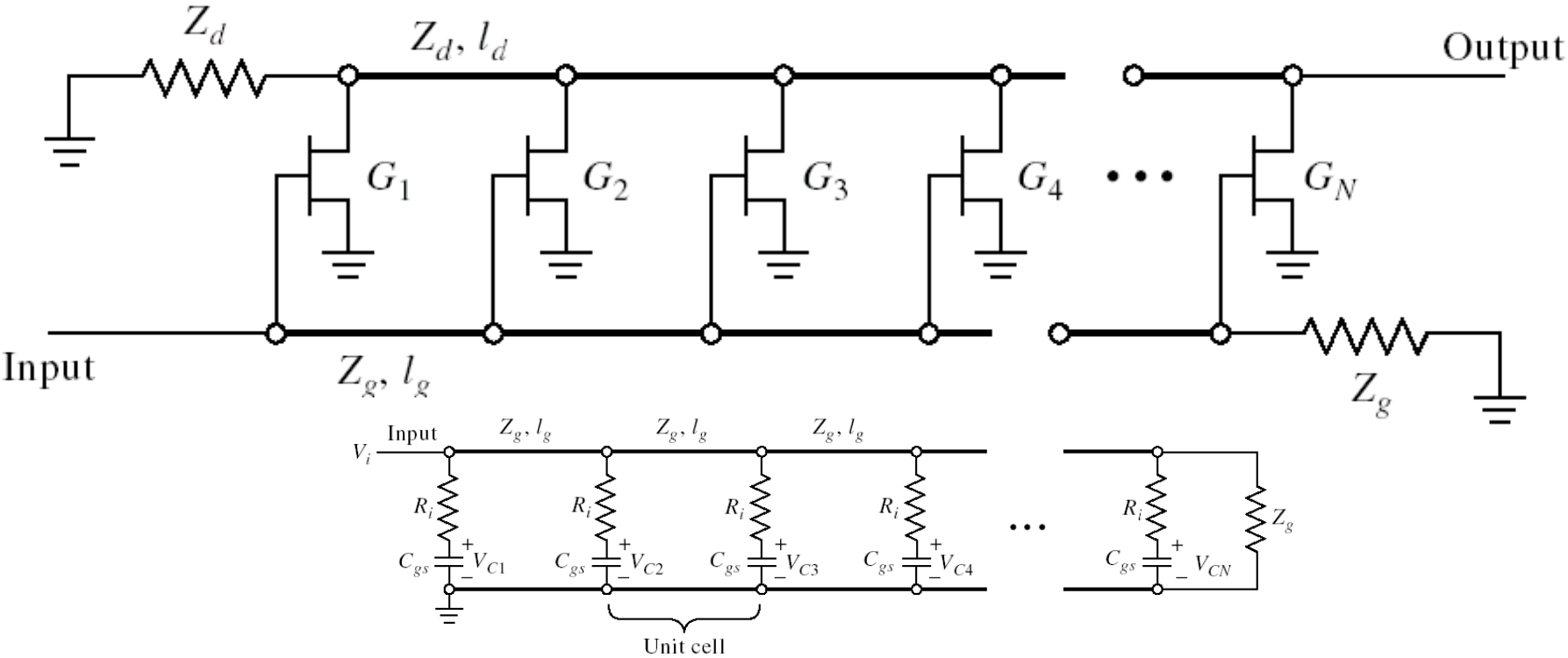

(a)

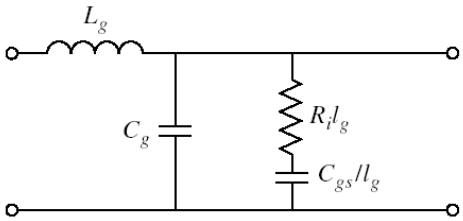

(b)

Distributed amplifiers

- the phase delays on the gate (input) and drain (output) lines are synchronized

$$\gamma_g = \alpha_g + j \cdot \beta_g \qquad \gamma_d = \alpha_d + j \cdot \beta_d \qquad \beta_g \cdot l_g = \beta_d \cdot l_d$$

- Power gain

$$G = \frac{g_m^2 \cdot Z_d \cdot Z_g}{4} \cdot \frac{\left(e^{-N \cdot \alpha_g \cdot l_g} - e^{-N \cdot \alpha_d \cdot l_d}\right)^2}{\left(e^{-\alpha_g \cdot l_g} - e^{-\alpha_d \cdot l_d}\right)^2}$$

- Lossless power gain

$$G = \frac{g_m^2 \cdot Z_d \cdot Z_g \cdot N^2}{4}$$

Distributed amplifiers

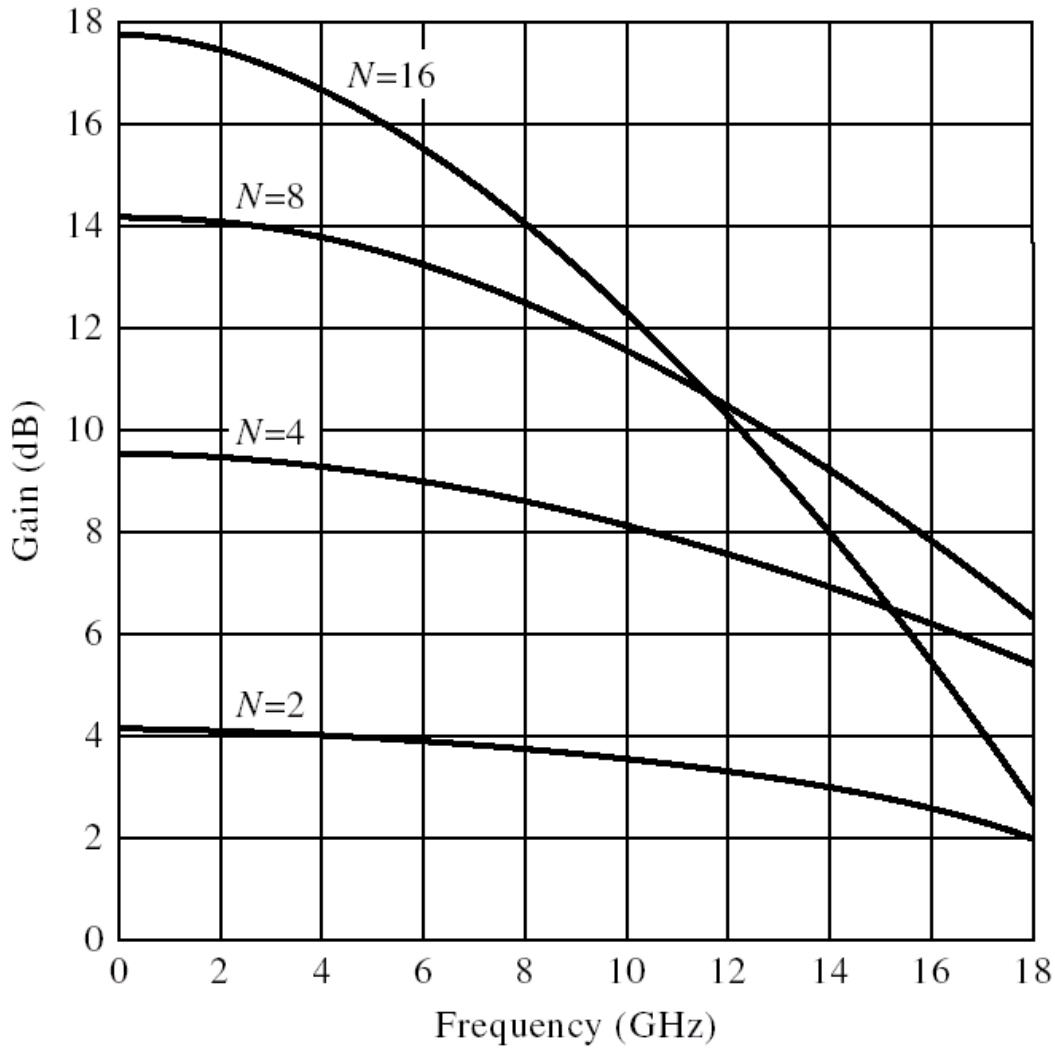

$$N_{opt} = \frac{\ln(\alpha_g \cdot l_g) - \ln(\alpha_d \cdot l_d)}{\alpha_g \cdot l_g - \alpha_d \cdot l_d}$$

Differential amplifiers

- In differential mode the input capacitances of the two transistors are connected in series
- Unity gain frequency is doubled

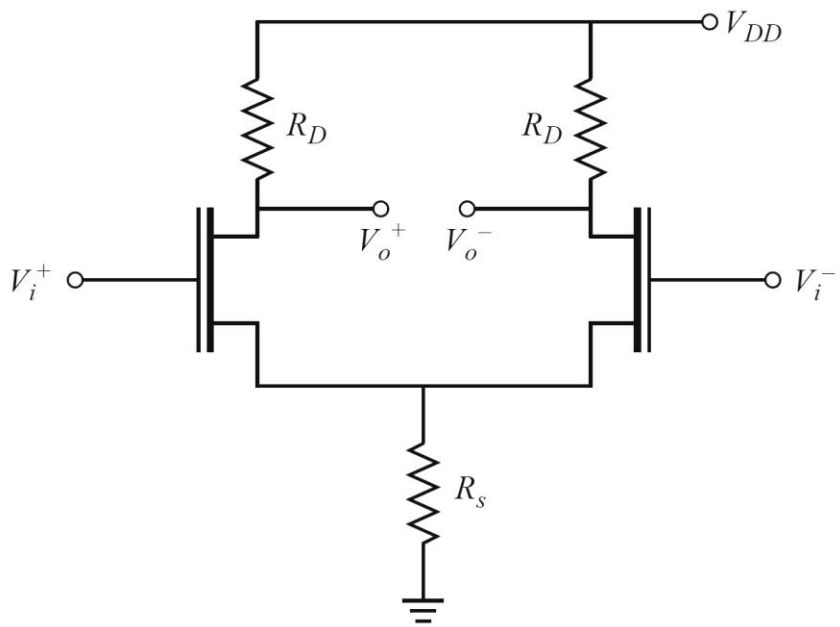

Differential amplifiers

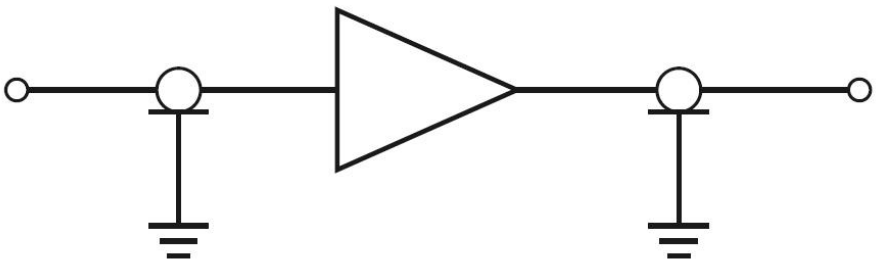

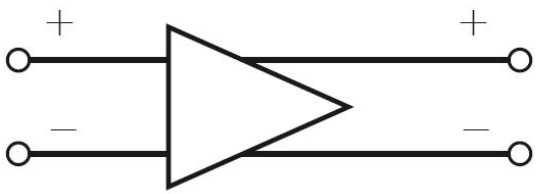

- We use circuits to transition from an unbalanced signal to a balanced signal (or vice versa)
  - hybrid couplers 3dB / 180°
  - "balun" (balanced - unbalanced)

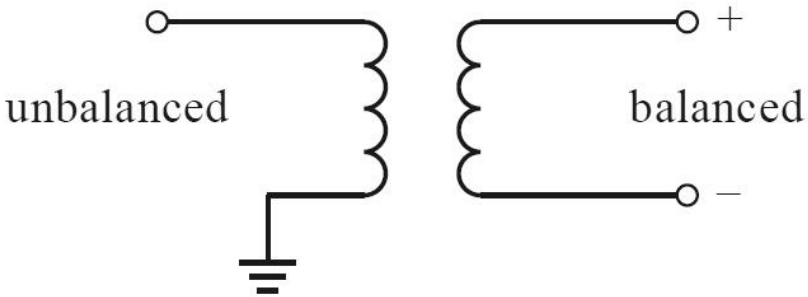

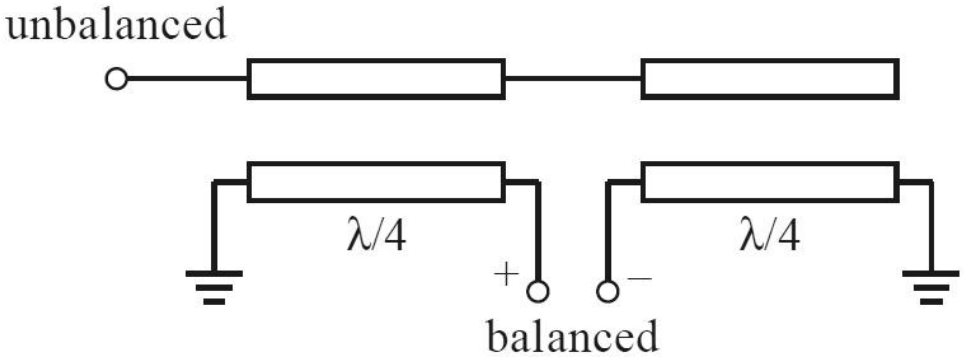

Compensated matching networks

- Control the design of the matching networks at more (at least 2) frequencies and impose the same gain

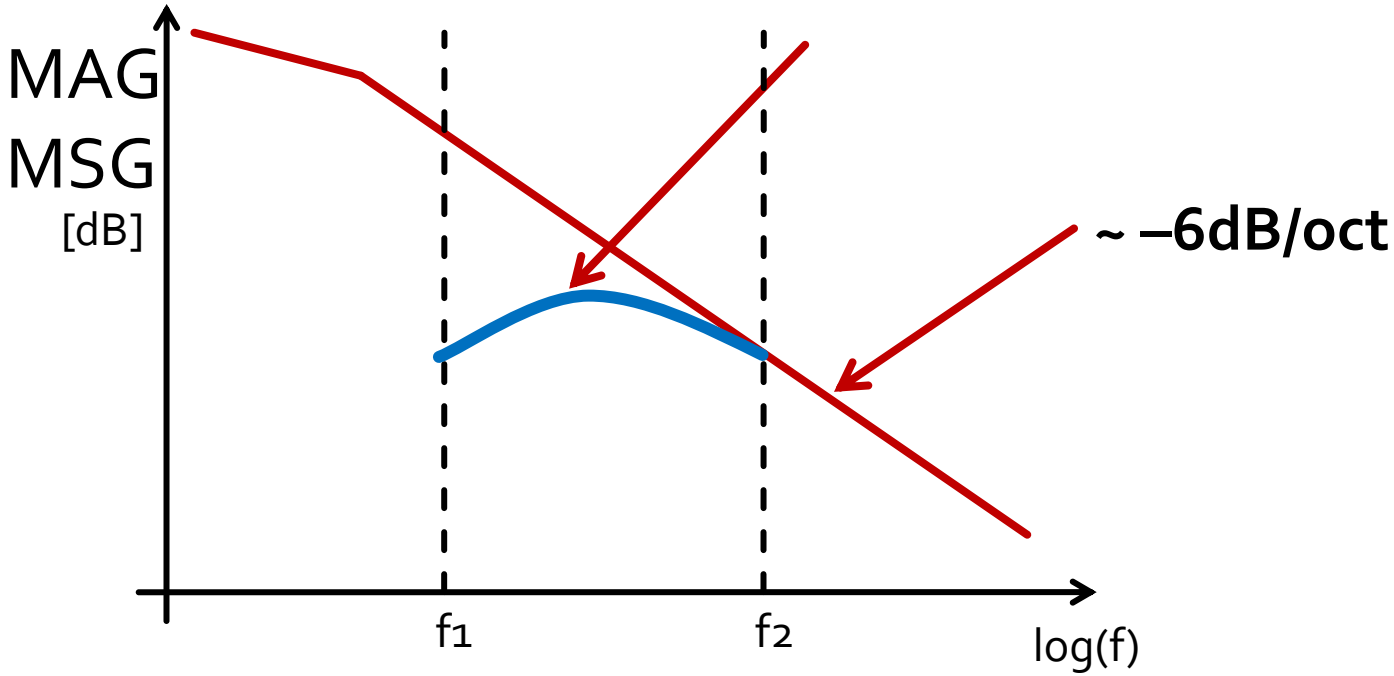

Microwave Amplifiers

Multistage Amplifier Design

Multistage amplifiers

- Interstage matching can be designed in two modes:
  - Each stage is matched to a virtual Γ = 0

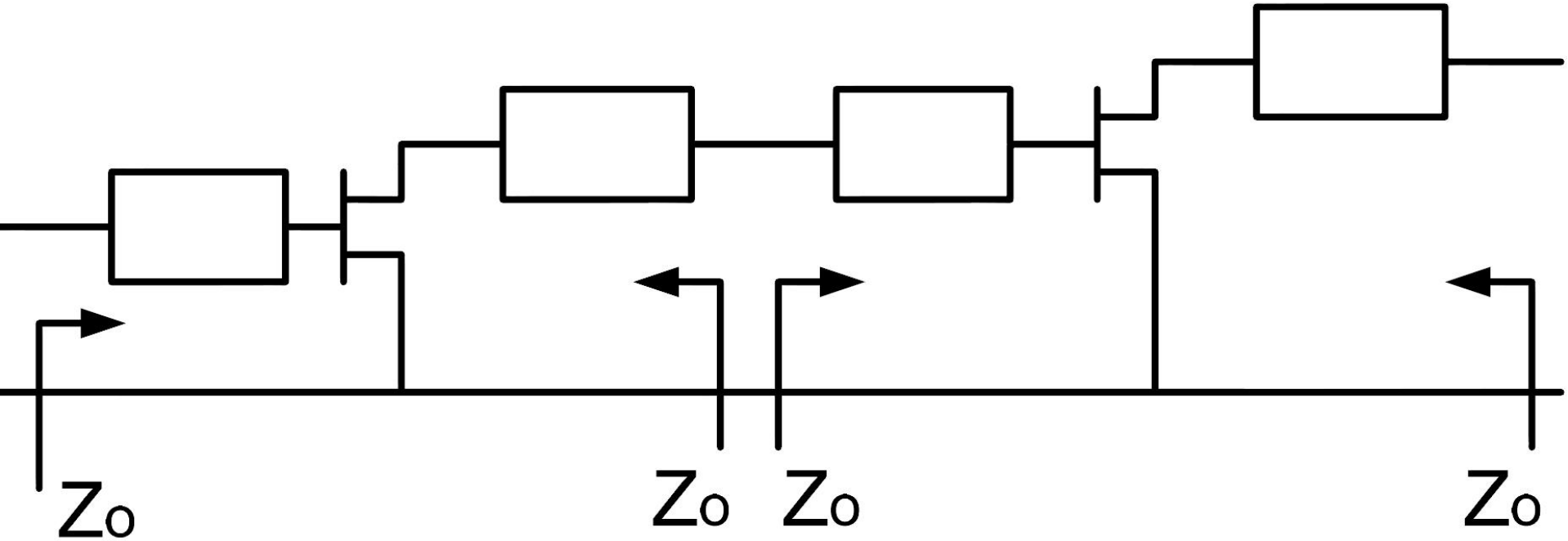

Multistage amplifiers

- Interstage matching can be designed in two modes:
  - One stage is matched to offer necessary Γ for the second stage

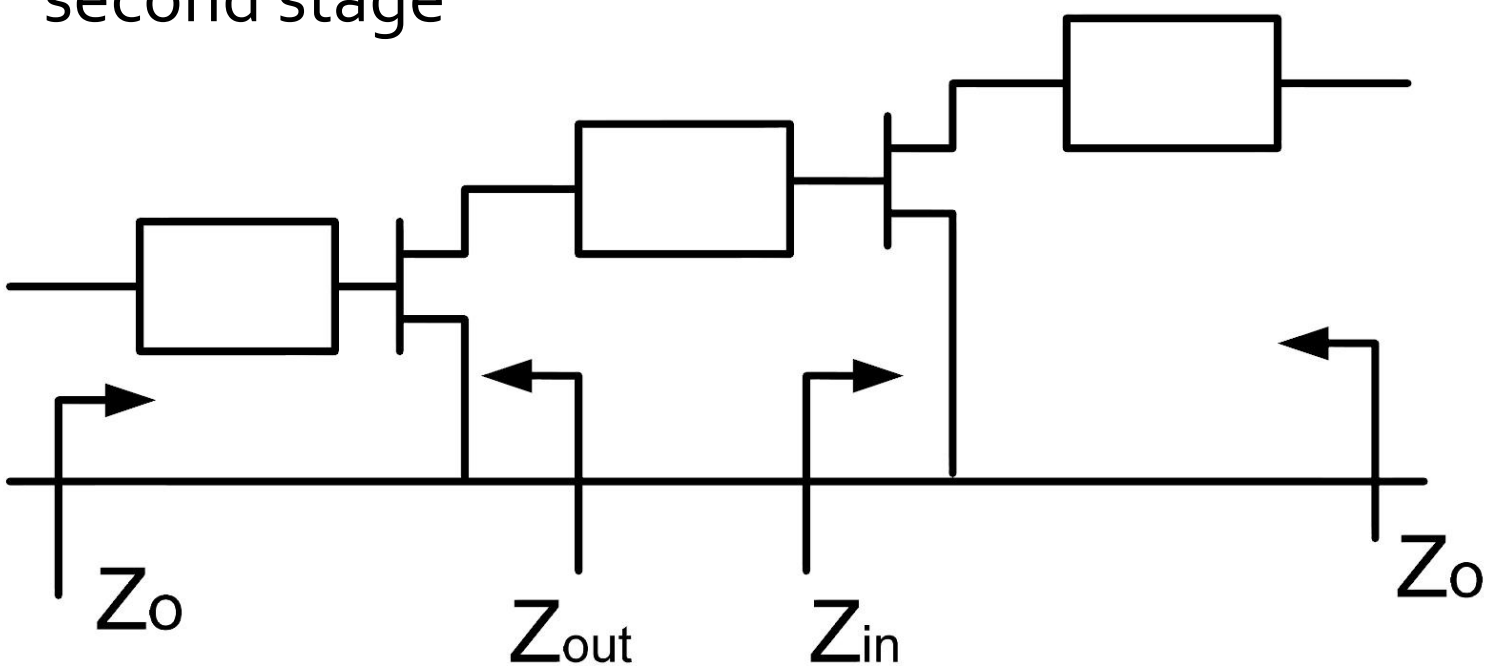

Example multistage LNA

- Similar to the project assignment
- LNA using ATF-34143 providing:
  - G = 20dB
  - F = 1dB
  - @f = 5GHz

Example

- ATF-34143 **at Vds=3V Id=20mA**.
- @5GHz
  - $S_{11} = 0.64\angle 139°$
  - $S_{12} = 0.119\angle -21°$
  - $S_{21} = 3.165\angle 16°$
  - $S_{22} = 0.22\angle 146°$
  - Fmin = 0.54 (**typically[dB] !**)
  - $\Gamma_{opt} = 0.45\angle 174°$
  - $r_n = 0.03$

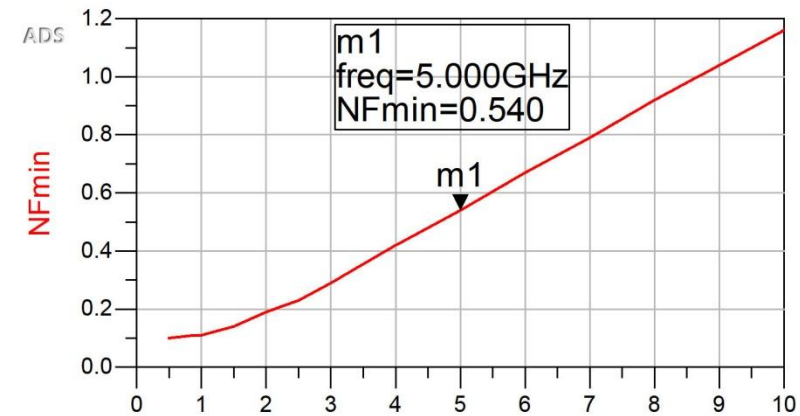

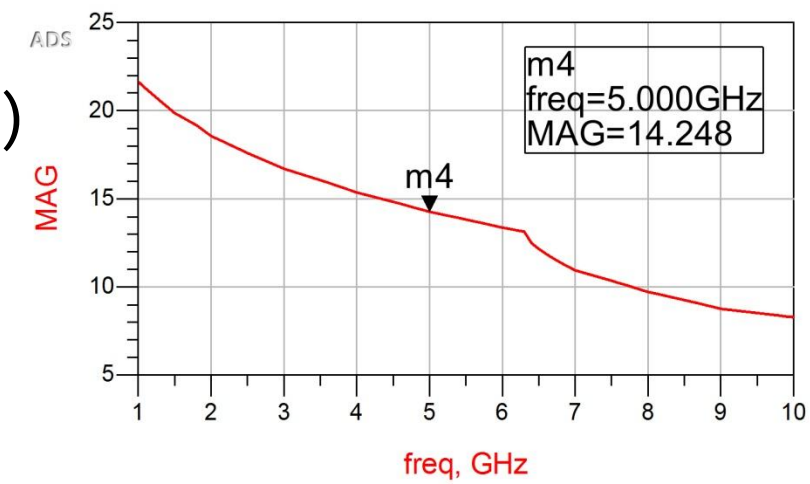

Example, LNA @ 5 GHz

- ATF-34143 **at Vds=3V Id=20mA**.
- @5GHz
  - $S_{11} = 0.64\angle 139°$
  - $S_{12} = 0.119\angle -21°$
  - $S_{21} = 3.165\angle 16°$
  - $S_{22} = 0.22\angle 146°$
  - Fmin = 0.54 (**tipic [dB]**
  - $\Gamma_{opt} = 0.45\angle 174°$
  - $r_n = 0.03$

```
!ATF-34143
!S-PARAMETERS at Vds=3V  Id=20mA.   LAST UPDATED 01-29-99

# ghz s ma r 50

2.0  0.75  -126  6.306  90  0.088  23  0.26  -120
2.5  0.72  -145  5.438  75  0.095  15  0.25  -140
3.0  0.69  -162  4.762  62  0.102  7  0.23  -156
4.0  0.65  166  3.806  38  0.111  -8  0.22  174
5.0  0.64  139  3.165  16  0.119  -21  0.22  146
6.0  0.65  114  2.706  -5  0.125  -35  0.23  118
7.0  0.66  89  2.326  -27  0.129  -49  0.25  91
8.0  0.69  67  2.017  -47  0.133  -62  0.29  67
9.0  0.72  48  1.758  -66  0.135  -75  0.34  46

!FREQ   Fopt    GAMMA OPT      RN/Zo
!GHZ    dB     MAG     ANG     -

2.0  0.19  0.71  66  0.09
2.5  0.23  0.65  83  0.07
3.0  0.29  0.59  102  0.06
4.0  0.42  0.51  138  0.03
5.0  0.54  0.45  174  0.03
6.0  0.67  0.42  -151  0.05
7.0  0.79  0.42  -118  0.10
8.0  0.92  0.45  -88  0.18
9.0  1.04  0.51  -63  0.30
10.0  1.16  0.61  -43  0.46
```

Multistage amplifiers

- If we need more power gain than only one transistor can supply
  - design target 20dB
  - MAG @5GHz = 14.248 dB < 20dB
- We use Friis formula to separate the target:
  - Power gain
  - Noise
- on two amplifier stages

Friis Formula (noise)

$$F_{cas} = F_1 + \frac{F_2 - 1}{G_1} + \frac{F_3 - 1}{G_1 \cdot G_2} + \frac{F_4 - 1}{G_1 \cdot G_2 \cdot G_3} + \cdots$$

- Effects of Friis Formula:
  - it's essential that the first stage is as **noiseless** as possible even if that means sacrificing power
  - the second stage can be optimized for power **gain**
- Friis Formula **must** be used in **linear scale!**
- **Avago/Broadcom AppCAD**
  - AppCAD Free Design Assistant Tool for Microsoft Windows → Google

Friis Formula (noise)

$$G_{cas} = G_1 \cdot G_2 \qquad F_{cas} = F_1 + \frac{1}{G_1}(F_2 - 1)$$

- Friis formula
  - first stage: low noise factor, probably resulting in a smaller gain
  - second stage: high gain, probably resulting in higher noise factor
- It's essential to introduce a design margin (reserve: ΔF, ΔG)
  - $G = G_{design} + \Delta G$
  - $F = F_{design} - \Delta F$
- Interpretation of the design target
  - $G > G_{design}$, better, but it's not required to sacrifice other parameters to maximize the gain
  - $F < F_{design}$, better, the smaller the better, we must target **the smallest possible noise** factor as long as the other design parameters **are met**

Friis Formula (noise)

- Friis formula
  - first stage: low noise factor, probably resulting in a smaller gain
  - second stage: high gain, probably resulting in higher noise factor
- Separation of the design parameters on the 2 amplification stages (Estimated!)
  - input stage: F1 = 0.7 dB, G1 = 9 dB
  - output stage: F2 = 1.2 dB, G2 = 13 dB
- To verify the result apply Friis formula
- First transform to **linear scale !**

$$F_1 = 10^{\frac{F_1[dB]}{10}} = 10^{0.07} = 1.175 \qquad G_1 = 10^{\frac{G_1[dB]}{10}} = 10^{0.9} = 7.943$$

$$F_2 = 10^{\frac{F_2[dB]}{10}} = 10^{0.12} = 1.318 \qquad G_2 = 10^{\frac{G_2[dB]}{10}} = 10^{1.3} = 19.953$$

$$F_{cas} = F_1 + \frac{1}{G_1}(F_2 - 1) = 1.215 \qquad G_{cas} = G_1 \cdot G_2 = 158.49$$

$$F_{cas} = 10 \cdot \log(1.215) = 0.846\ dB \qquad G_{cas} = 10 \cdot \log(158.49) = 22\ dB$$

Friis Formula (noise)

- Avago/Broadcom AppCAD

AppCAD - [NoiseCalc]

File Calculate Application Examples Options Help

NoiseCalc

Set Number of Stages = 2 Calculate [F4]

Stage Data	Units	Stage 1	Stage 2
Stage Name:		Avago Duplexer	Avago ATF-36xxx
Noise Figure	dB	0.7	1.2
Gain	dB	9	13
Output IP3	dBm	100	14.5
dNF/dTemp	dB/°C	0	0
dG/dTemp	dB/°C	0	0
Stage Analysis:			
NF (Temp corr)	dB	0.70	1.20
Gain (Temp corr)	dB	9.00	13.00
Input Power	dBm	-50.00	-41.00
Output Power	dBm	-41.00	-28.00
d NF/d NF	dB/dB	0.97	0.15
d NF/d Gain	dB/dB	-0.03	0.00
d IP3/d IP3	dBm/dBm	0.00	1.00

Enter System Parameters:

Input Power	-50	dBm
Analysis Temperature	25	°C
Noise BW	1	MHz
Ref Temperature	25	°C
S/N (for sensitivity)	10	dB
Noise Source (Ref)	290	°K

System Analysis:

Gain =	22.00	dB
Noise Figure =	0.85	dB
Noise Temp =	62.34	°K
SNR =	63.13	dB
MDS =	-113.13	dBm
Sensitivity =	-103.13	dBm
Noise Floor =	-173.13	dBm/Hz

Input IP3 =	-7.50	dBm
Output IP3 =	14.50	dBm
Input IM level =	-135.00	dBm
Input IM level =	-85.00	dBC
Output IM level =	-113.00	dBm
Output IM level =	-85.00	dBC
SFDR =	70.42	dB

Multistage amplifier design

- Separation of the design parameters on the 2 amplification stages (Estimated!)
  - input stage: $F_1 = 0.7$ dB, $G_1 = 9$ dB
  - output stage: $F_2 = 1.2$ dB, $G_2 = 13$ dB
  - total: $F = 0.85$ dB, $G = 22$ dB
- Meets design specifications (with design margin)
- We can reuse some of the results in the single stage LNA design (Lecture 8)
  - input matching can be used for the input of the first stage – very low noise, good enough power gain
  - output matching was designed for maximum gain, can be used for the output of the second stage
  - input and output matching were designed for 50Ω source and load, similar to current conditions

Multistage amplifier design

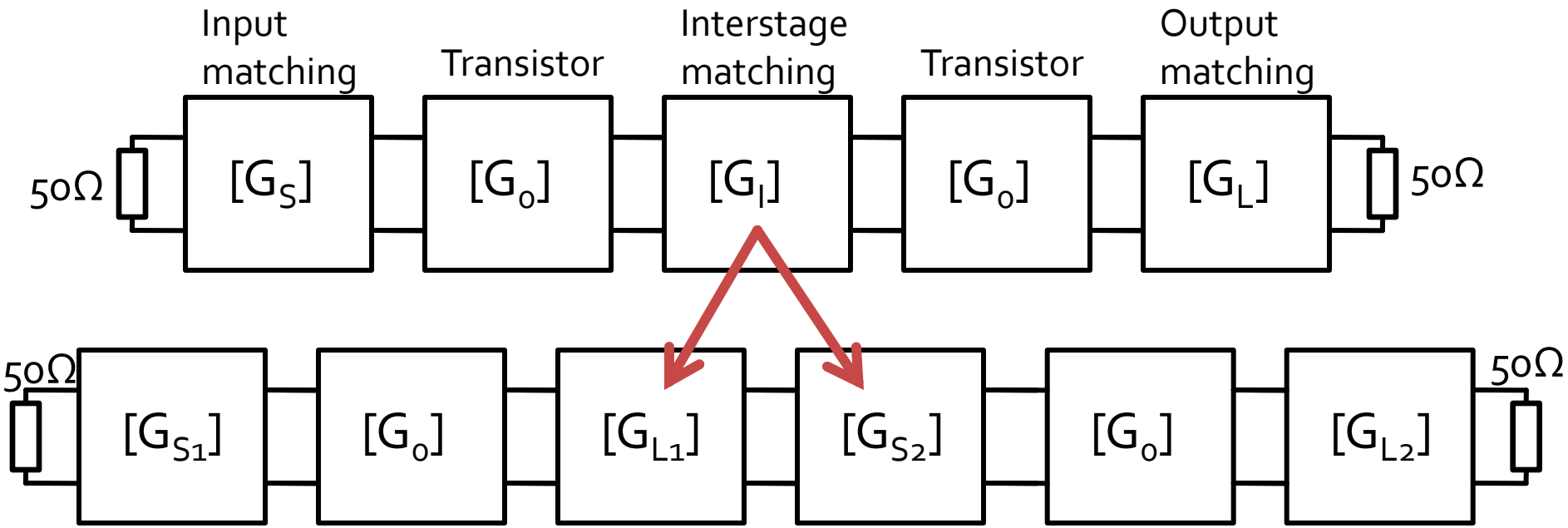

- Gain computation
  - Interstage matching can supplement the gain for both amplifier stages
  - The design for input and output matching must be achieved on a single transistor schematic (recommended: easier)

Input matching stage 1 (S1)

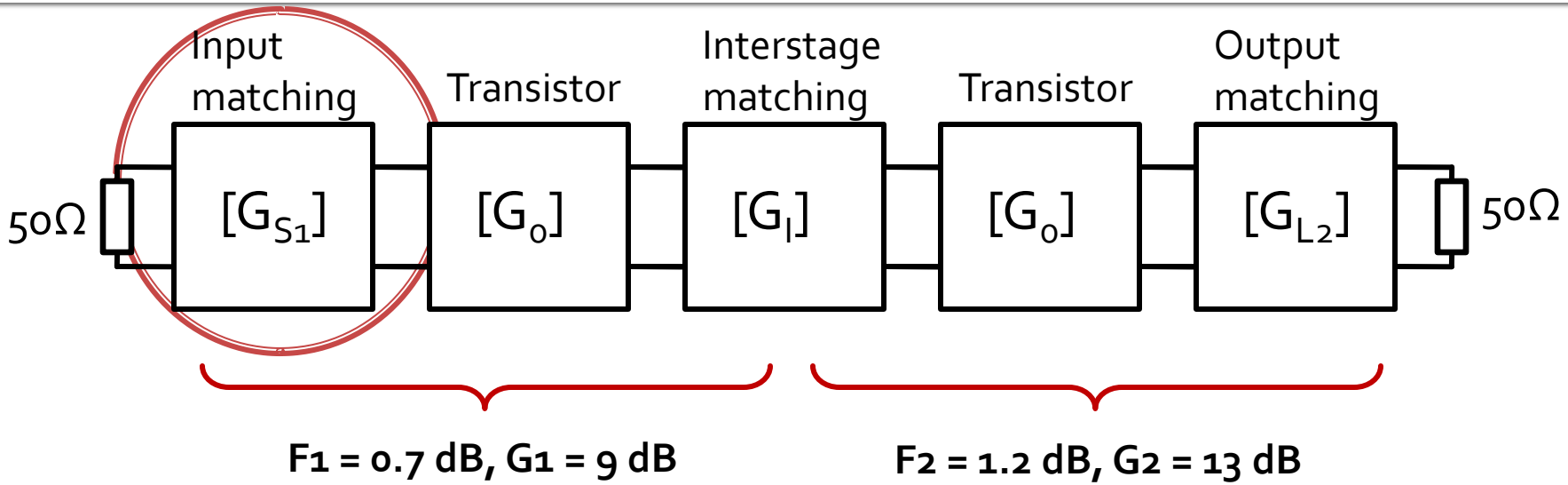

- We favor optimization for **noise** (low/minimum)
- Also considered
  - Power gain (can be lower, but not too much)
  - Bandwidth (through Q, quality factor)
  - Stability

Input matching stage 1 (S1)

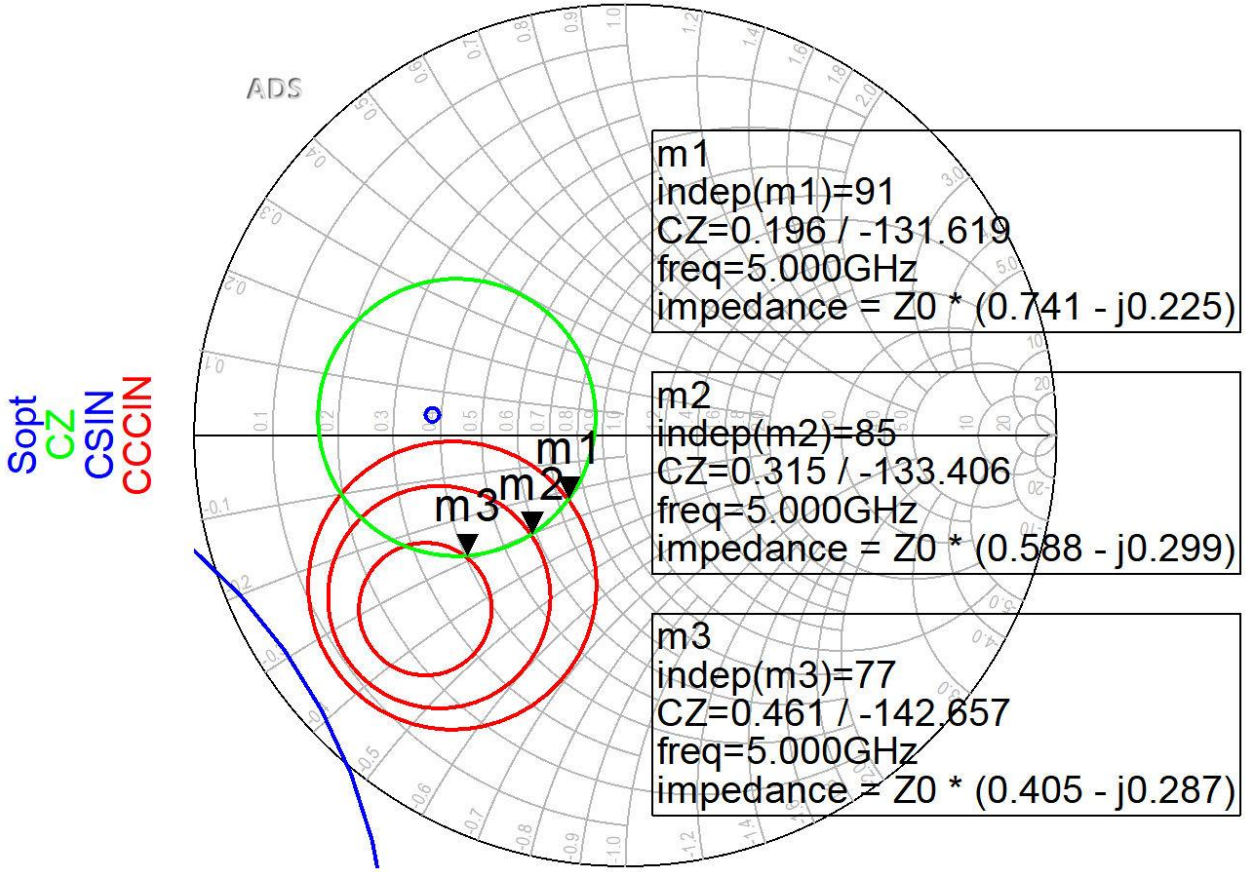

- For the input matching circuit
  - noise circle CZ: 0.75dB
  - input constant gain circles CCCIN: 1dB, 1.5dB, 2 dB
- We choose (small Q → wide bandwidth) position m1

Input matching stage 1 (S1)

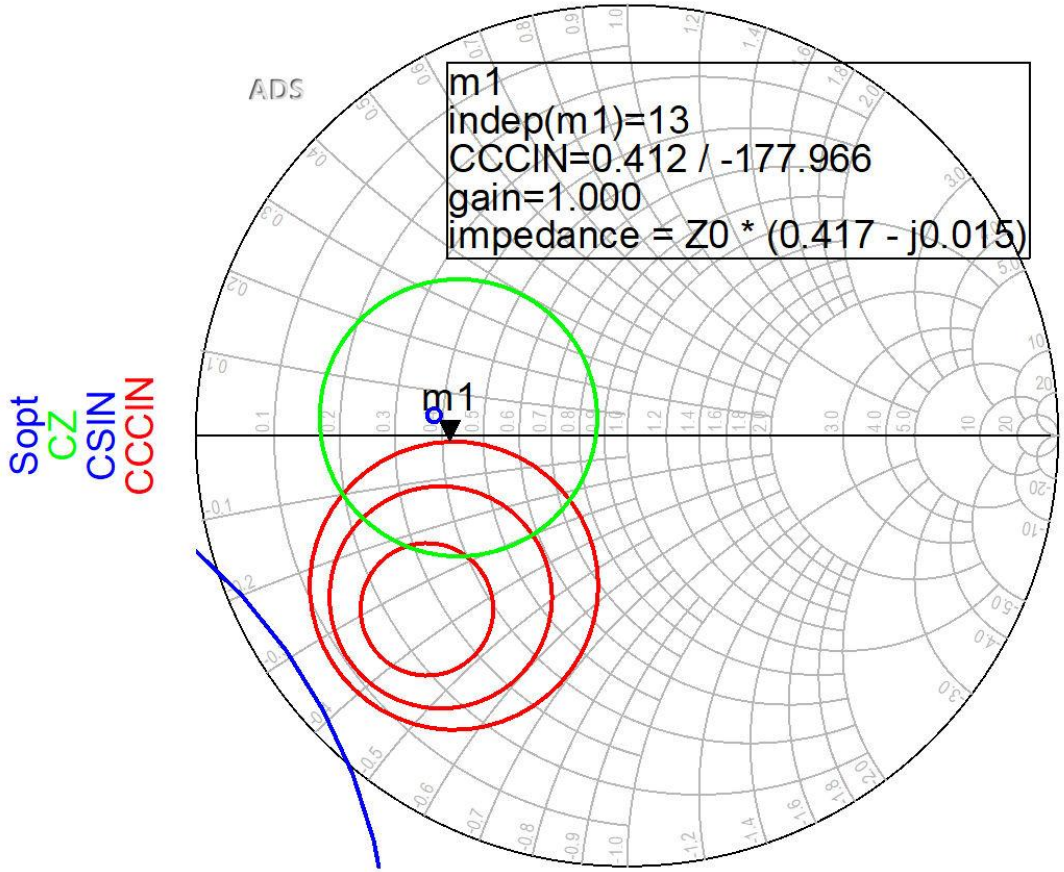

- If we can afford a 1.2dB decrease of the input gain for better NF,Q (Gs = 1 dB), position m1 above is better
- We favor **better** (smaller) **NF**

Input matching stage 1 (S1)

- **G_{S1}**: Position m1 in complex plane, **1dB**

$$\Gamma_S = 0.412\angle -178^\circ \qquad |\Gamma_S| = 0.412; \quad \varphi = -178^\circ$$

$$\cos(\varphi + 2\theta) = -|\Gamma_S| \qquad \mathrm{Im}[y_S(\theta)] = \frac{\mp 2\cdot|\Gamma_S|}{\sqrt{1-|\Gamma_S|^2}}$$

$$\cos(\varphi + 2\theta) = -0.412 \Rightarrow \qquad (\varphi + 2\theta) = \pm 114.33^\circ$$

$$\theta_{sp} = \tan^{-1}(\mathrm{Im}[y_S(\theta)]) = \tan^{-1}\left(\frac{\mp 2\cdot|\Gamma_S|}{\sqrt{1-|\Gamma_S|^2}}\right)$$

$$(\varphi + 2\theta) = \begin{cases} +114.33^\circ \\ -114.33^\circ \end{cases} \quad \theta = \begin{cases} 146.2^\circ \\ 31.8^\circ \end{cases} \quad \mathrm{Im}[y_S(\theta)] = \begin{cases} -0.904 \\ +0.904 \end{cases} \quad \theta_{sp} = \begin{cases} 137.9^\circ \\ 42.1^\circ \end{cases}$$

Output matching stage 2 (L2)

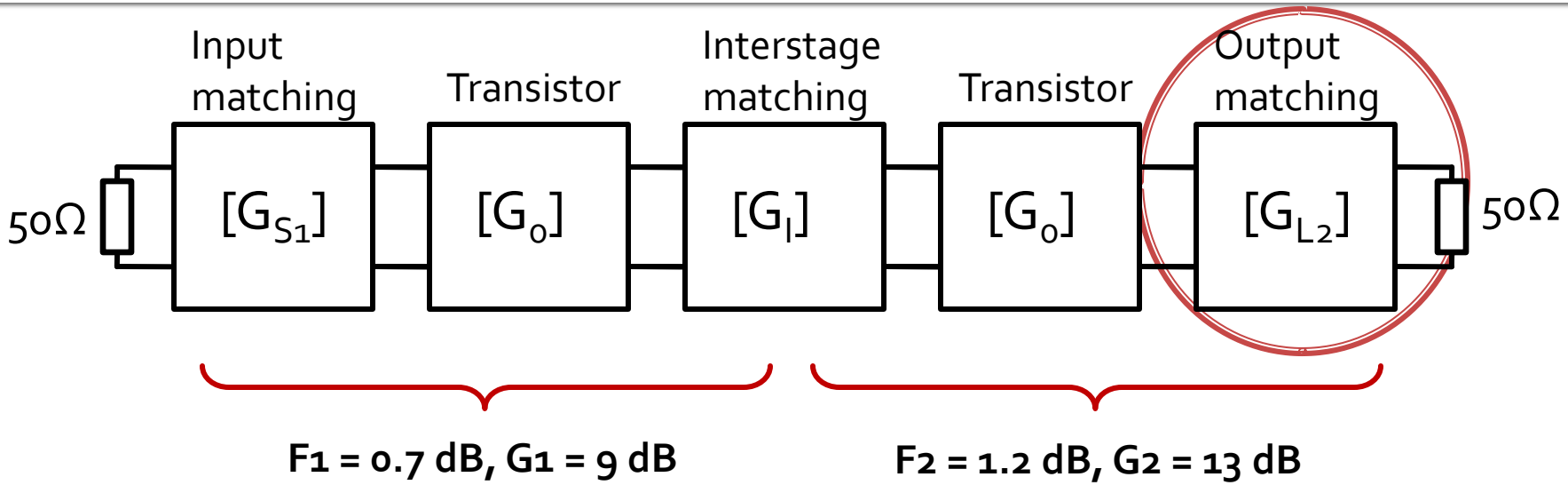

- We favor optimization for **gain** (high/maximum)
- Also considered
  - Bandwidth (through Q, quality factor)
  - Stability
- noise is **not** an issue, output matching doesn't influence noise factor

Output matching stage 2 (L2)

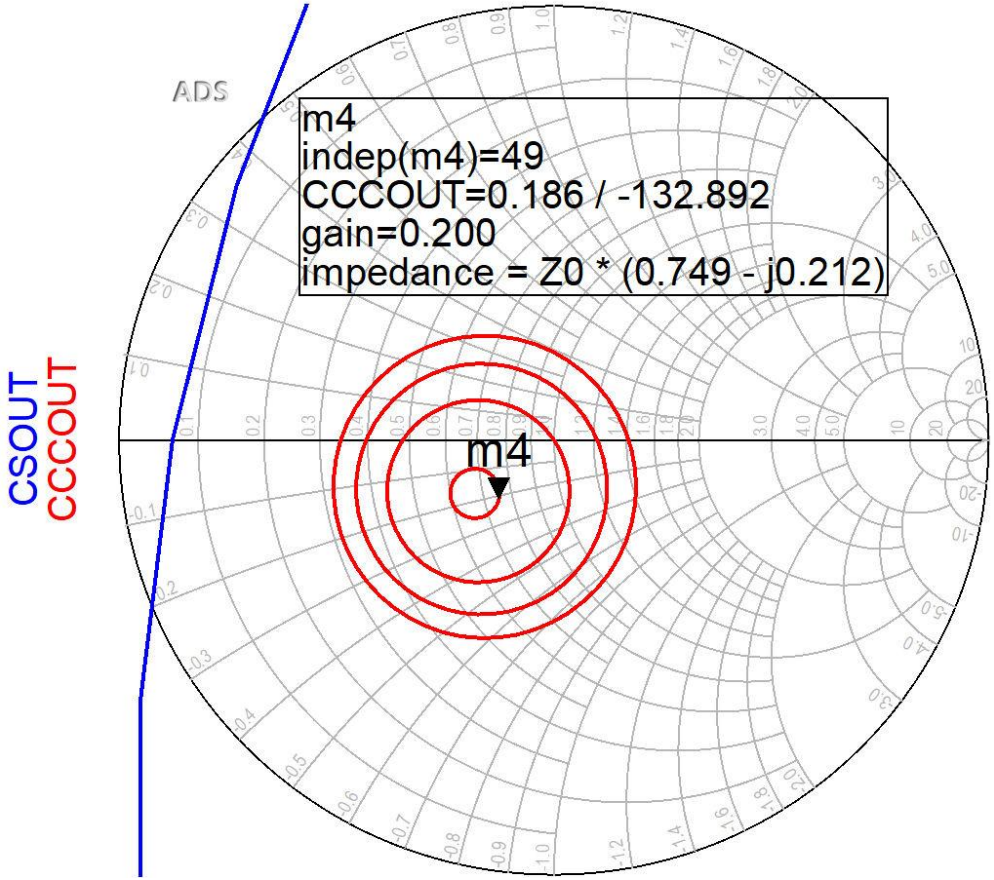

- output constant gain circles CCCOUT: -0.4dB, -0.2dB, 0dB, +0.2dB
- The lack of noise restrictions allows optimization for better gain (close to maximum – position m4)

Output matching stage 2 (L2)

- G_{L2}: Position m4 in complex plane, **0.2dB**

$$\Gamma_L = 0.186\angle -132.9^\circ \qquad |\Gamma_L| = 0.186; \quad \varphi = -132.9^\circ$$

$$\cos(\varphi + 2\theta) = -|\Gamma_L| \qquad \mathrm{Im}[y_L(\theta)] = \frac{-2\cdot|\Gamma_L|}{\sqrt{1-|\Gamma_L|^2}} = -0.379$$

$$\cos(\varphi + 2\theta) = -0.186 \Rightarrow \quad (\varphi + 2\theta) = \pm 100.72^\circ$$

$$\theta_{sp} = \tan^{-1}(\mathrm{Im}[y_L(\theta)]) = \tan^{-1}\left(\frac{\mp 2\cdot|\Gamma_L|}{\sqrt{1-|\Gamma_L|^2}}\right)$$

$$(\varphi + 2\theta) = \begin{cases} +100.72^\circ \\ -100.72^\circ \end{cases} \quad \theta = \begin{cases} 116.8^\circ \\ 16.1^\circ \end{cases} \quad \mathrm{Im}[y_L(\theta)] = \begin{cases} -0.379 \\ +0.379 \end{cases} \quad \theta_{sp} = \begin{cases} 159.3^\circ \\ 20.7^\circ \end{cases}$$

Interstage matching (I)

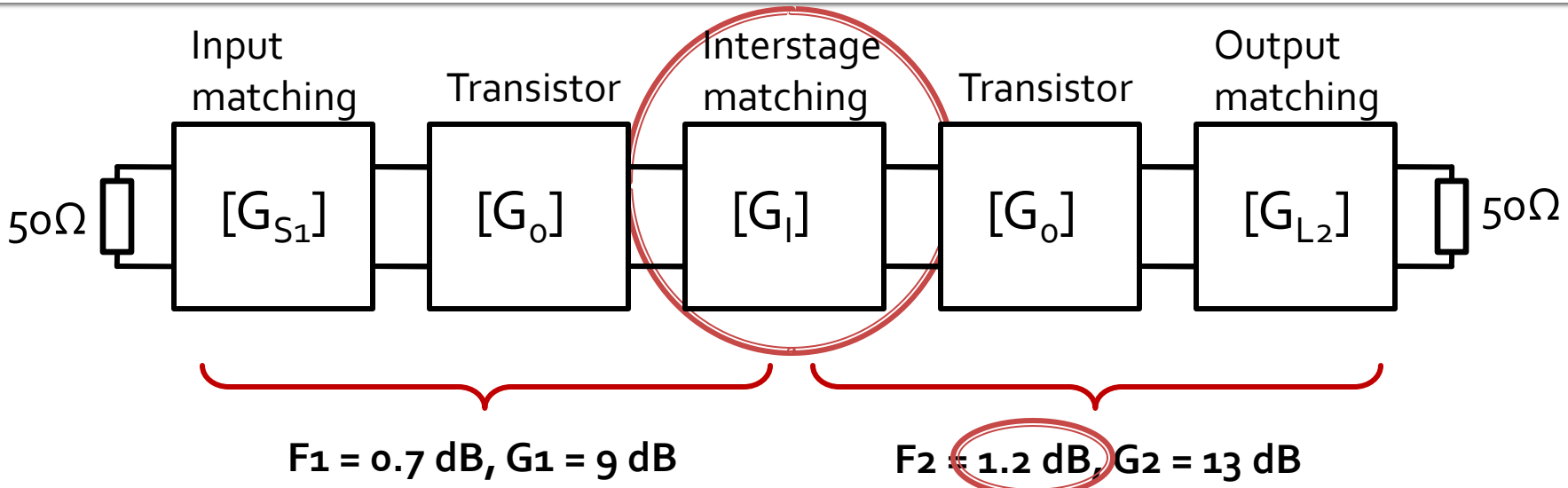

- We take into account **gain** (high) but also **noise**
- Also considered
  - Bandwidth (through Q, quality factor)
  - Stability
- We influence the noise factor of the second stage, the noise must be considered but with less restrictive conditions (Friis shows that higher noise is acceptable).

Multistage amplifier

- Power gain

$$G_T[dB] = G_{S1}[dB] + G_0[dB] + G_I[dB] + G_0[dB] + G_{L2}[dB]$$

$$G_0 = |S_{21}|^2 = 10.017 = 10.007\ dB$$

$$G_T[dB] = 1\ dB + 10\ dB + G_I[dB] + 10\ dB + 0.2\ dB$$

$$G_T[dB] = 21.2\ dB + G_I[dB]$$

- Interstage match design must provide at least 0.8dB gain to meet specifications, by better match for the output of the first transistor and for the input of the second transistor

Interstage matching 1/2

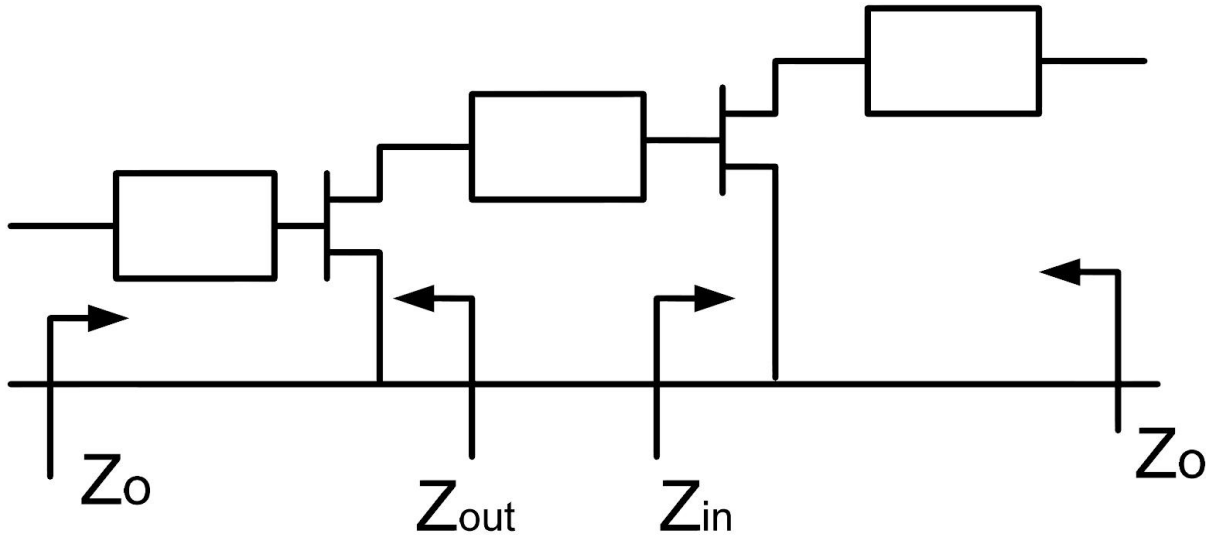

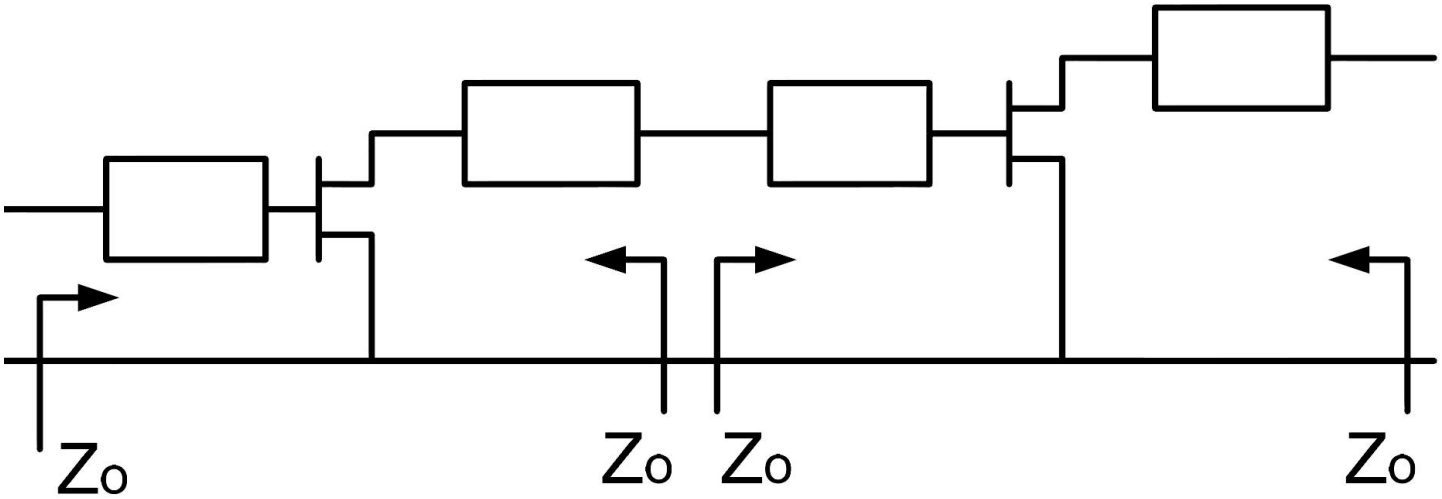

Interstage matching 1

- A single transmission line keeps constant the magnitude of the reflection coefficient
  - a circle around the Smith Chart center

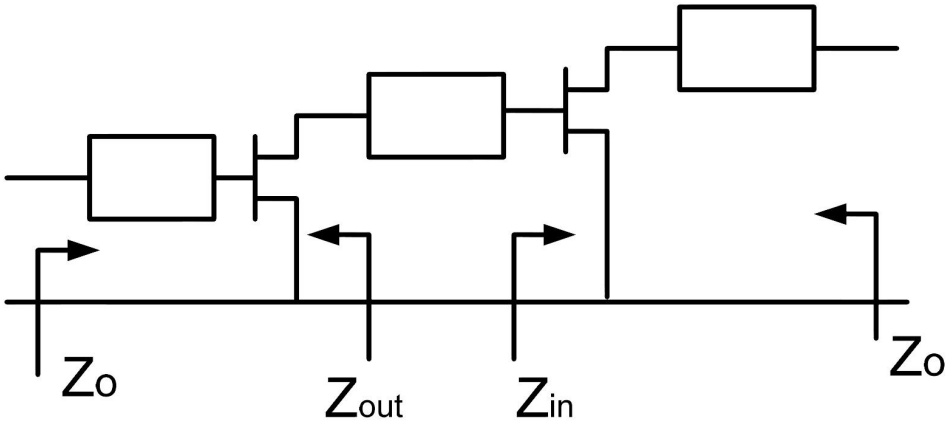

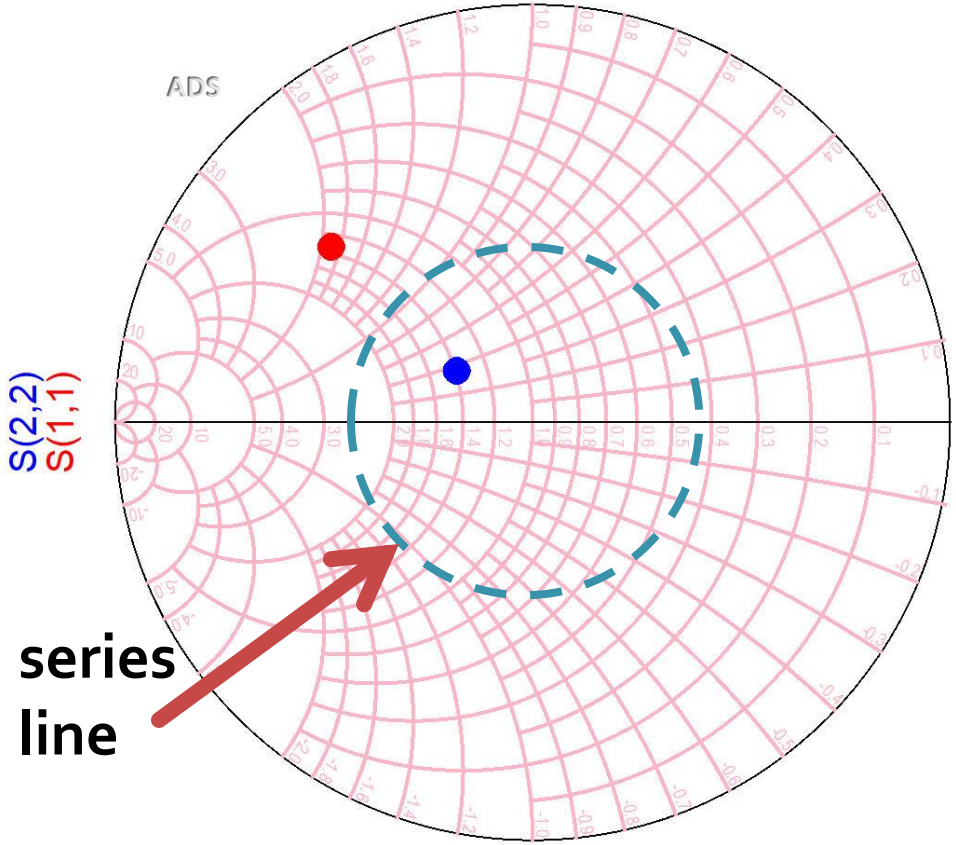

Interstage matching 1

- Can be designed in two ways:
  - starting from the output of the first stage (reflection coefficient S_{22}^*) towards the circles (drawn for the second stage):
    - stability
    - gain
    - noise
  - starting from the input of the second stage (reflection coefficient S_{11}^*) towards the circles (drawn for the first stage):
    - stability
    - gain
- First design direction has the advantage to offer control over the noise introduced by the second stage

Interstage matching 1

- Starting point – complex conjugate

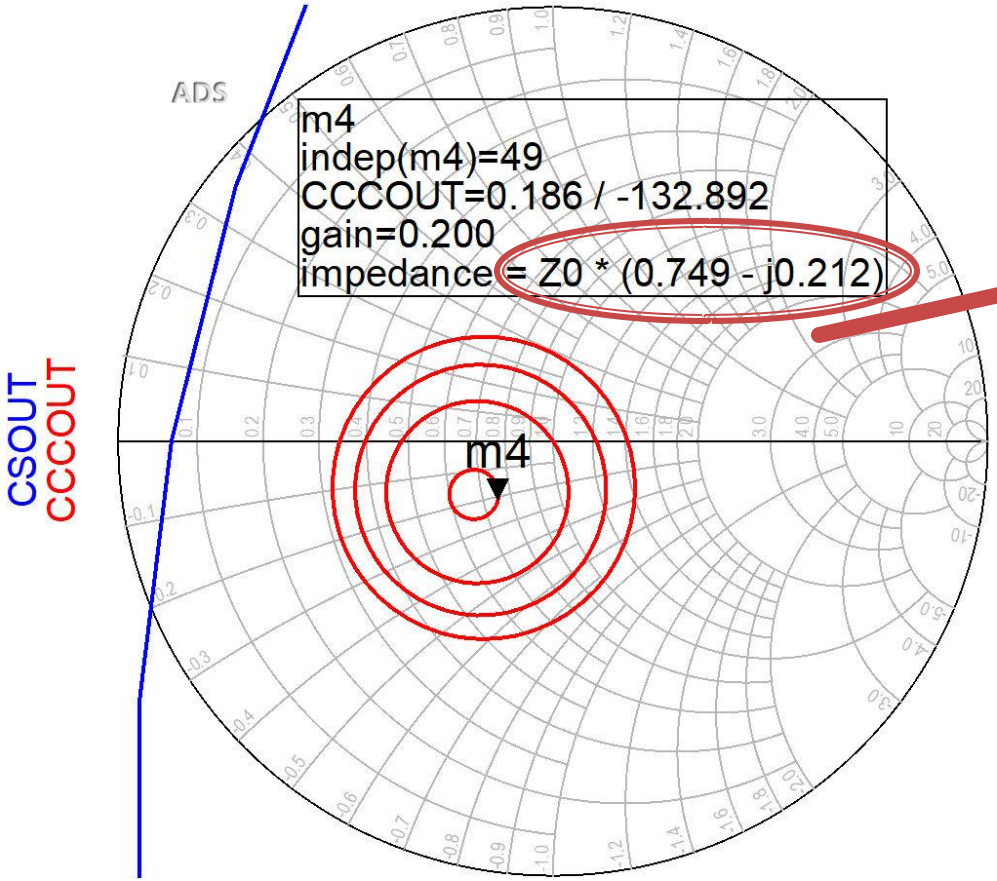

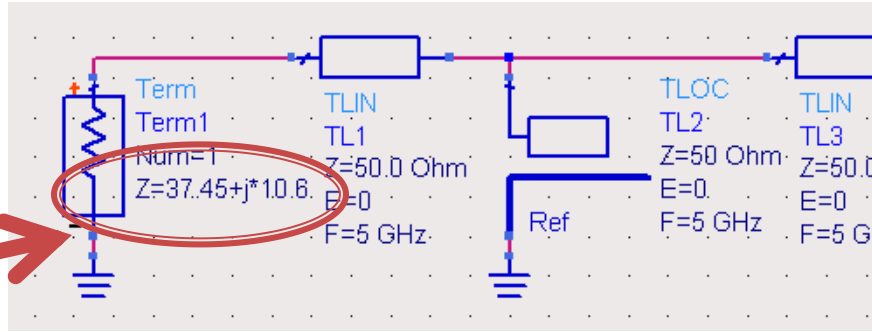

$$Z = 50\Omega \cdot (0.749 - j \cdot 0.212)$$

$$Z = 37.45\Omega - j \cdot 10.6\Omega$$

$$Z^* = 37.45\Omega + j \cdot 10.6\Omega$$

Interstage matching 1

- A **single** transmission line allows reaching a point that cannot be optimized
  - G_{L1} = 0.2dB
  - G_{S2} = 1 dB
  - F_2 = 0.7 dB
- Only one parameter is available for wide band performance tuning

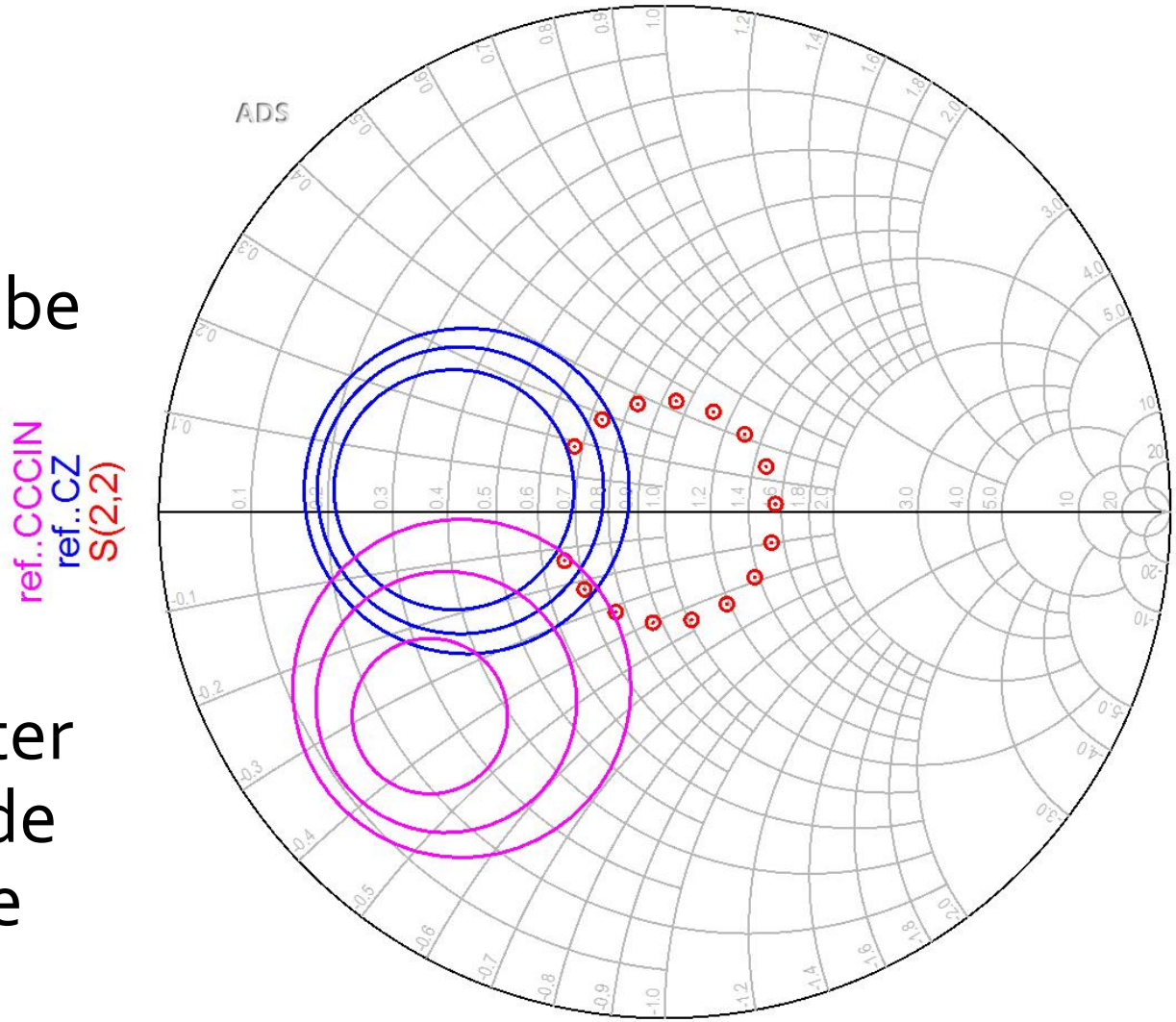

ADS

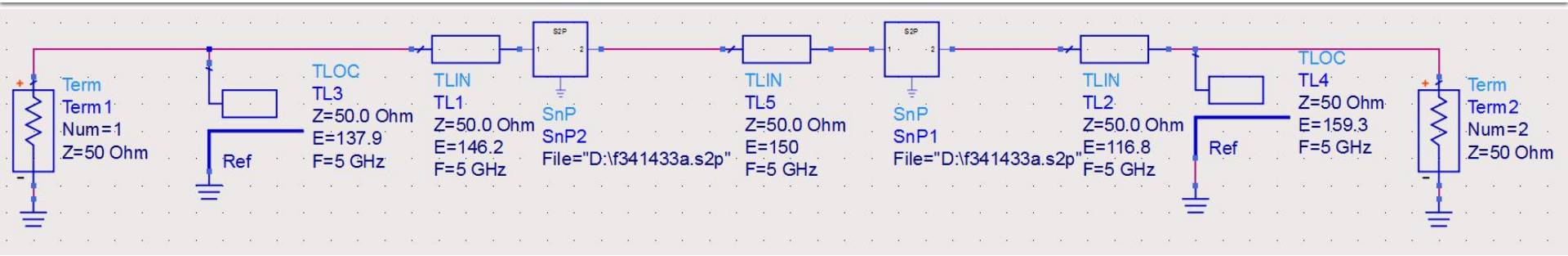
Term
Term1
Num=1
Z=50 Ohm
Ref
TLOC
TL3
Z=50.0 Ohm
E=137.9
F=5 GHz
TLIN
TL1
Z=50.0 Ohm
E=146.2
F=5 GHz
SnP
SnP2
File="D:\f341433a.s2p"
TLIN
TL5
Z=50.0 Ohm
E=150
F=5 GHz
SnP
SnP1
File="D:\f341433a.s2p"
TLIN
TL2
Z=50.0 Ohm
E=116.8
F=5 GHz
Ref
TLOC
TL4
Z=50 Ohm
E=159.3
F=5 GHz
Term
Term2
Num=2
Z=50 Ohm

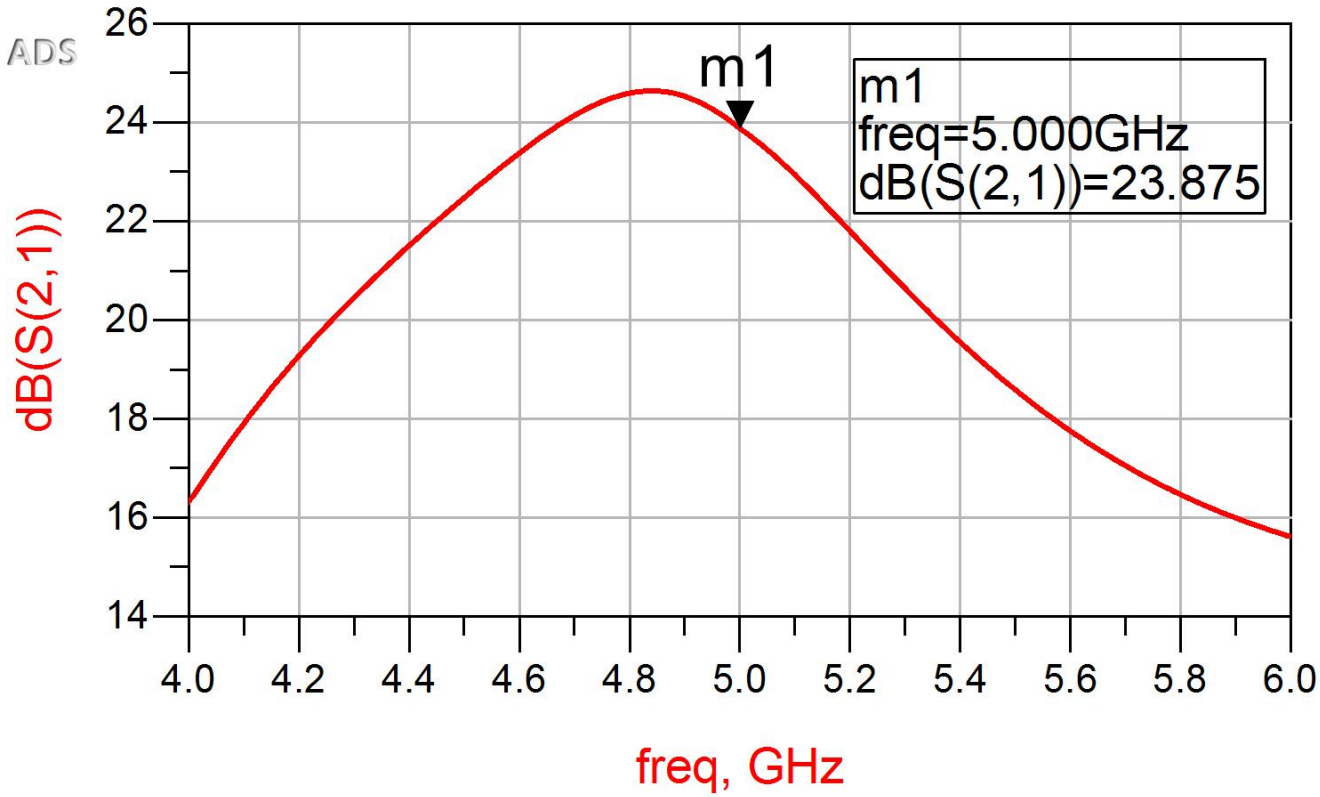
ADS
m1
m1
freq=5.000GHz
dB(S(2,1))=23.875
dB(S(2,1))
26
24
22
20
18
16
14
4.0
4.2
4.4
4.6
4.8
5.0
5.2
5.4
5.6
5.8
6.0
freq, GHz

ADS

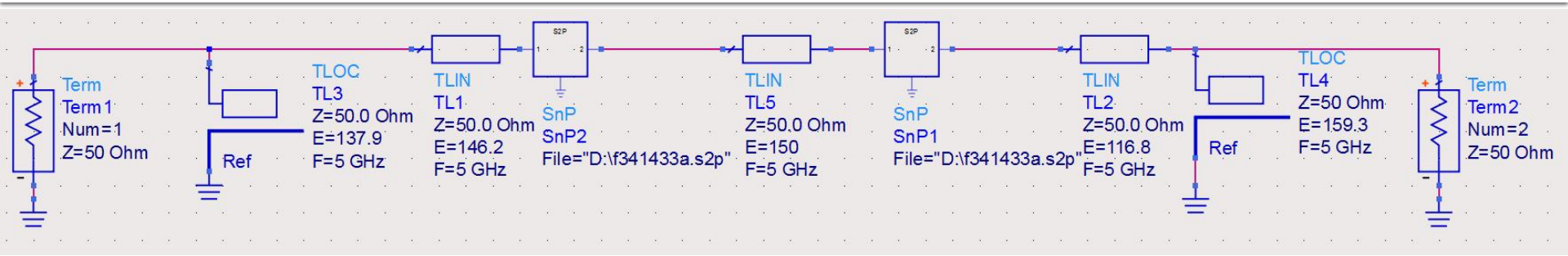
Term
Term1
Num=1
Z=50 Ohm
Ref
TLOC
TL3
Z=50.0 Ohm
E=137.9
F=5 GHz
TLIN
TL1
Z=50.0 Ohm
E=146.2
F=5 GHz
SnP
SnP2
File="D:\f341433a.s2p"
TLIN
TL5
Z=50.0 Ohm
E=150
F=5 GHz
SnP
SnP1
File="D:\f341433a.s2p"
TLIN
TL2
Z=50.0 Ohm
E=116.8
F=5 GHz
Ref
TLOC
TL4
Z=50 Ohm
E=159.3
F=5 GHz
Term
Term2
Num=2
Z=50 Ohm

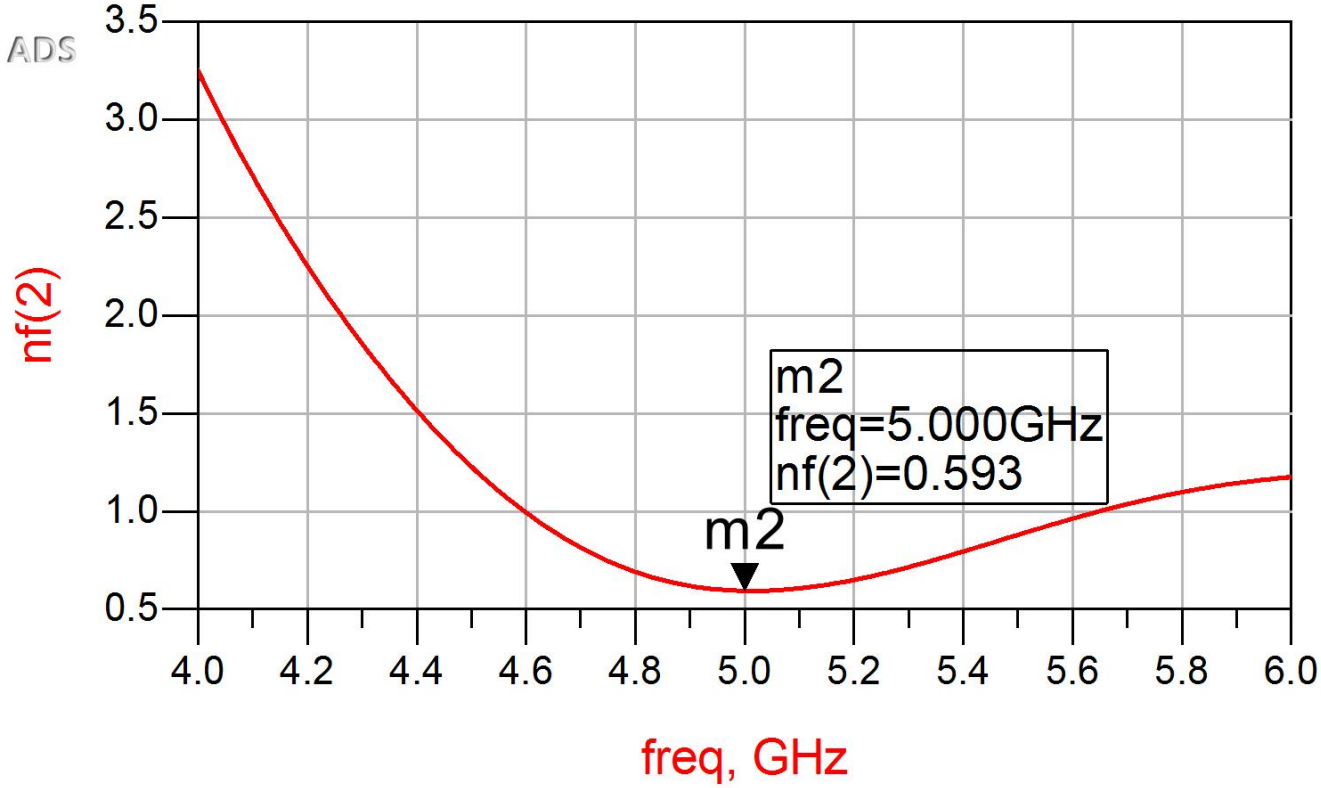
ADS
nf(2)
3.5
3.0
2.5
2.0
1.5
1.0
0.5
4.0
4.2
4.4
4.6
4.8
5.0
5.2
5.4
5.6
5.8
6.0
freq, GHz
m2
freq=5.000GHz
nf(2)=0.593
m2

Interstage matching 2

- Using multiple transmission lines for matching each stage to a intermediate Γ=0 (virtual) allows detailed control over final reflection coefficient (and thus gain/noise)

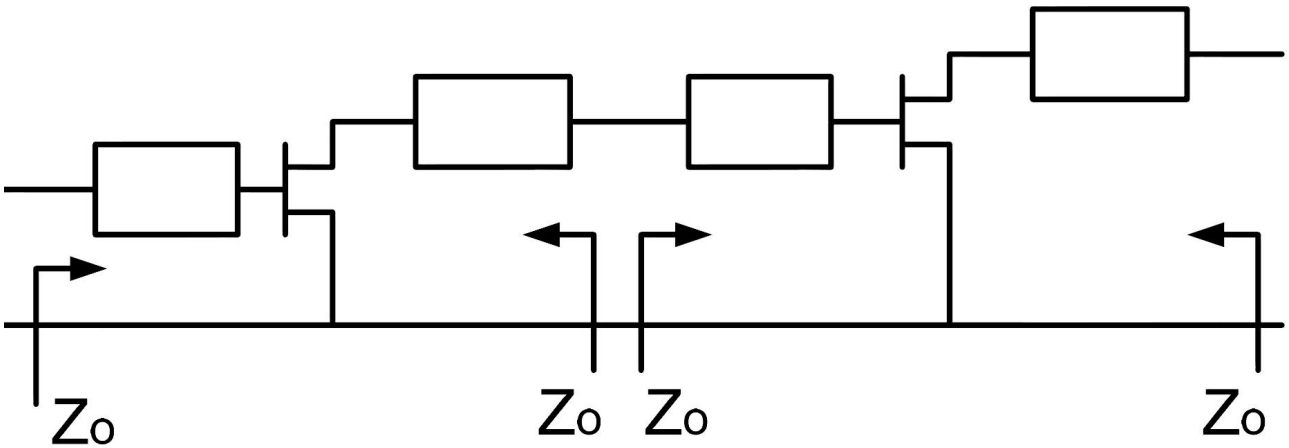

Interstage matching 2

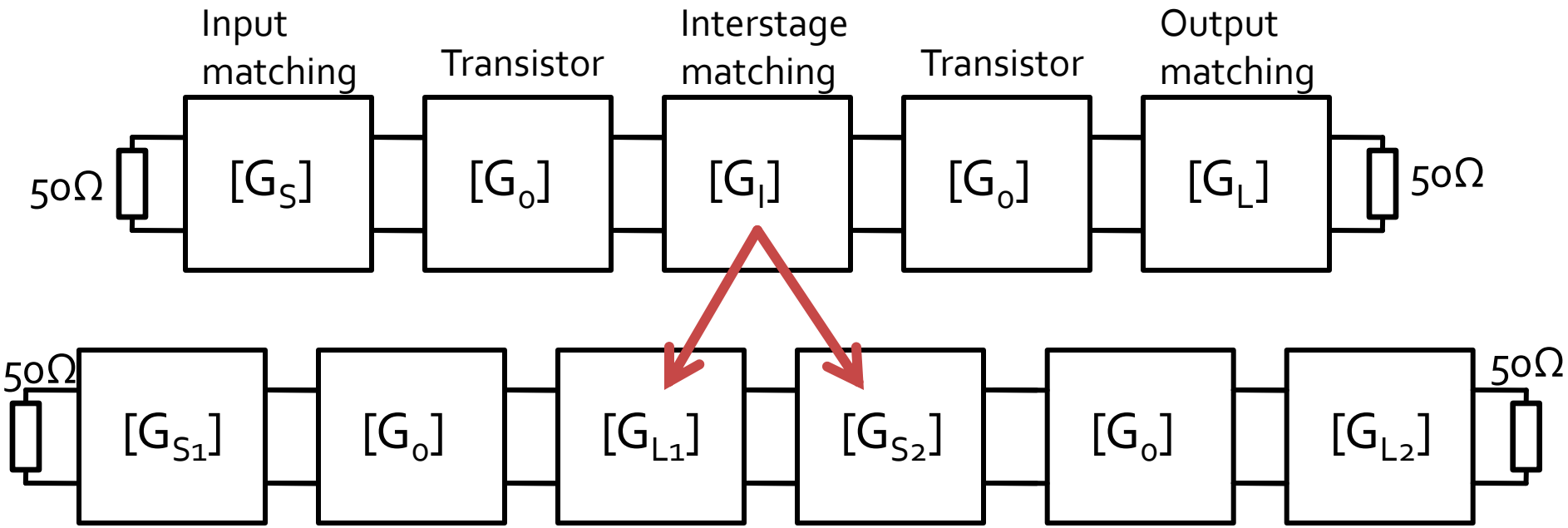

- Instead of a single match design we have to design two matching networks
- However both matching networks are anchored to a fixed point (50Ω, Γ=0) so we can use design **formulas** (Impedance Matching with Stubs)
- Also, due to the presence of multiple networks, we can target **precise** positions (reflection coefficients) on both stages

Multistage amplifier

- Power gain

$$G_T[dB] = G_{S1}[dB] + G_0[dB] + G_{L1}[dB] + G_{S2}[dB] + G_0[dB] + G_{L2}[dB]$$

$$G_T[dB] = 1\ dB + 10\ dB + G_{L1}[dB] + G_{S2}[dB] + 10\ dB + 0.2\ dB$$

$$G_T[dB] = 21.2\ dB + \underbrace{G_{L1}[dB] + G_{S2}[dB]}$$

- Interstage match design must provide at least 0.8dB **in total** gain to meet specifications, by separately better matching the output of the first transistor and for the input of the second transistor

Interstage matching 2

- Using multiple transmission lines for matching each stage to a intermediate Γ=0 (virtual) allows detailed control over reflection coefficient on both stages

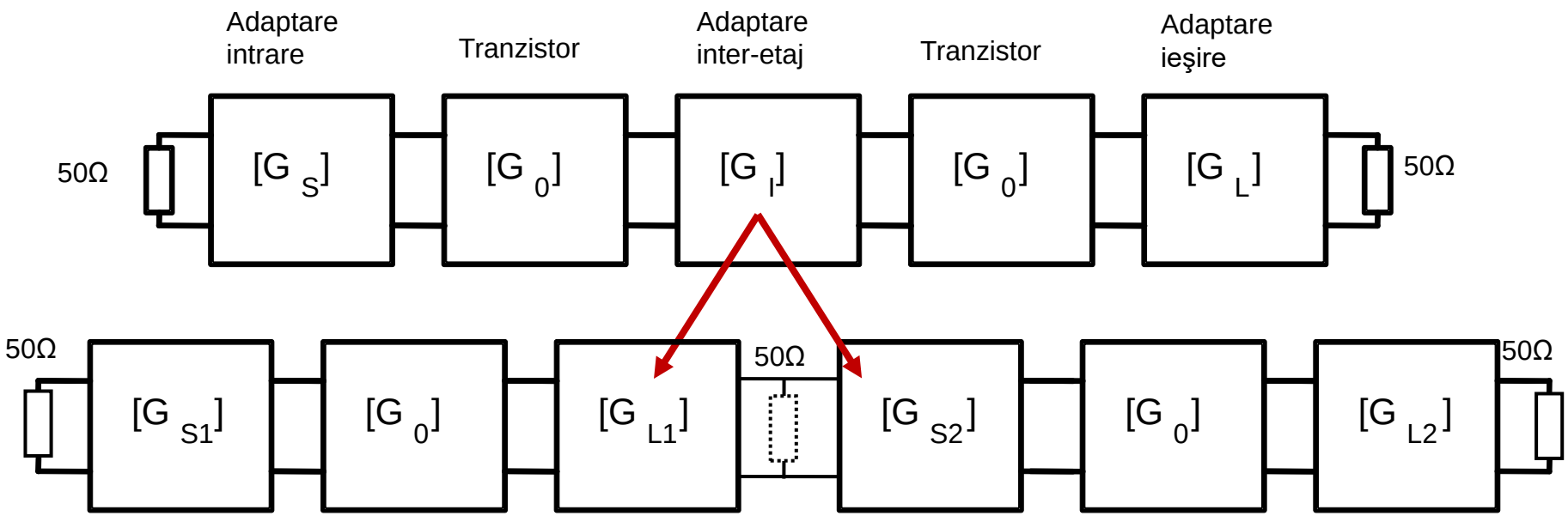

Interstage matching 2

- One of the stages **creates** through its matching network a reflection coefficient Γ=0 towards which the other stage is matched

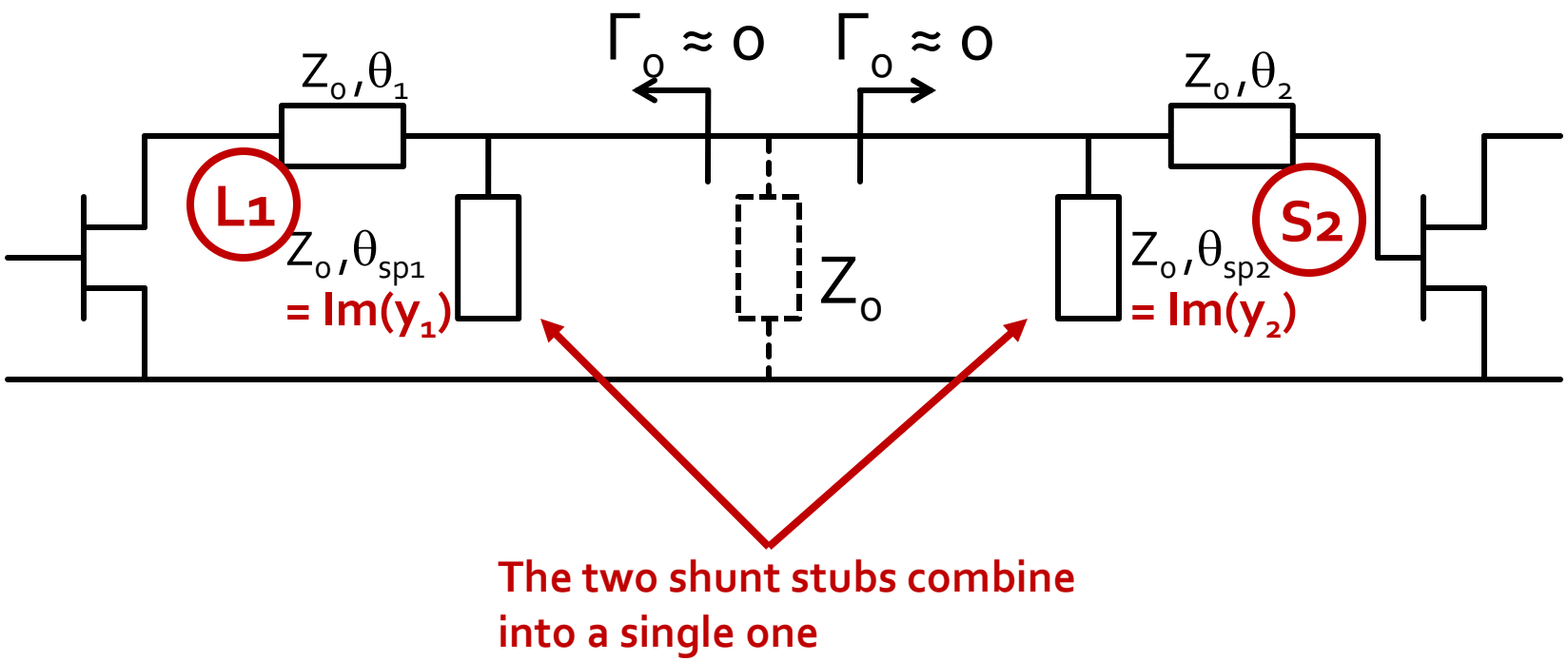

Interstage matching 2

- The two shunt stubs combine into a single one

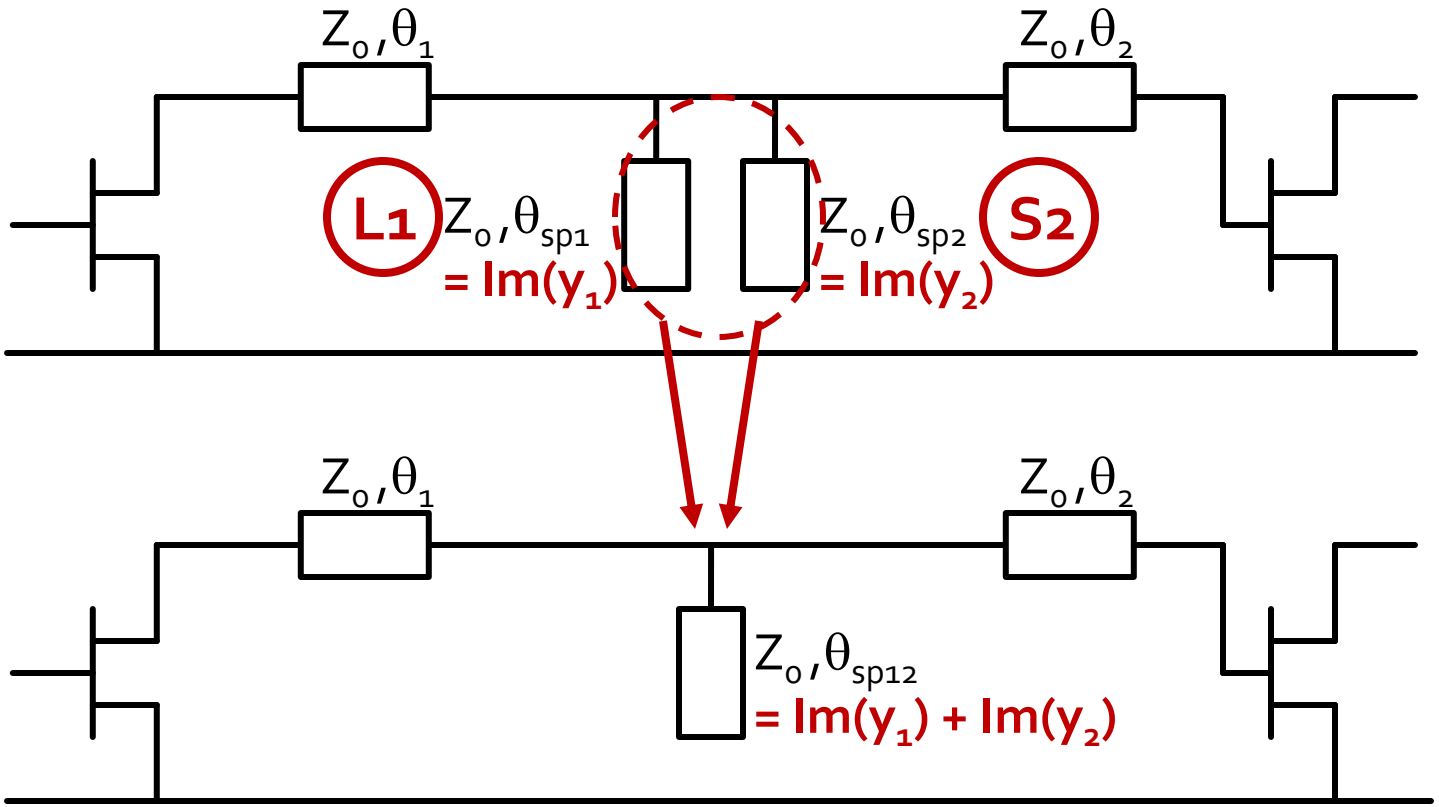

Interstage matching 2

- series line → moves around the center of the SC
- shunt stub → on the circle g=1

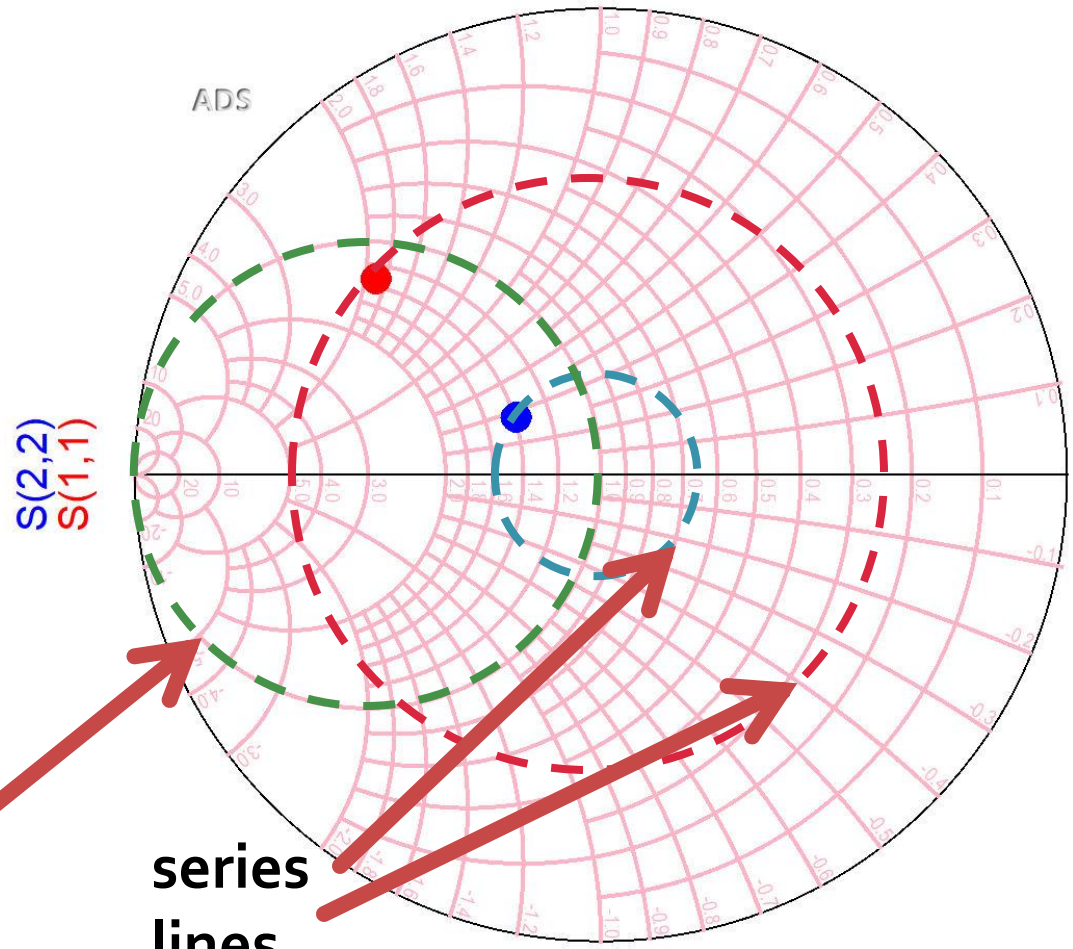

shunt stub

series lines

Interstage matching 2

- For every stage we use a series line and a shunt stub
  - the series line moves the reflection coefficient from the desired starting point on the unity conductance circle g=1
  - the shunt stub moves the point to the center of the Smith Chart (Zo match)
- The two shunt stubs will then combine into one

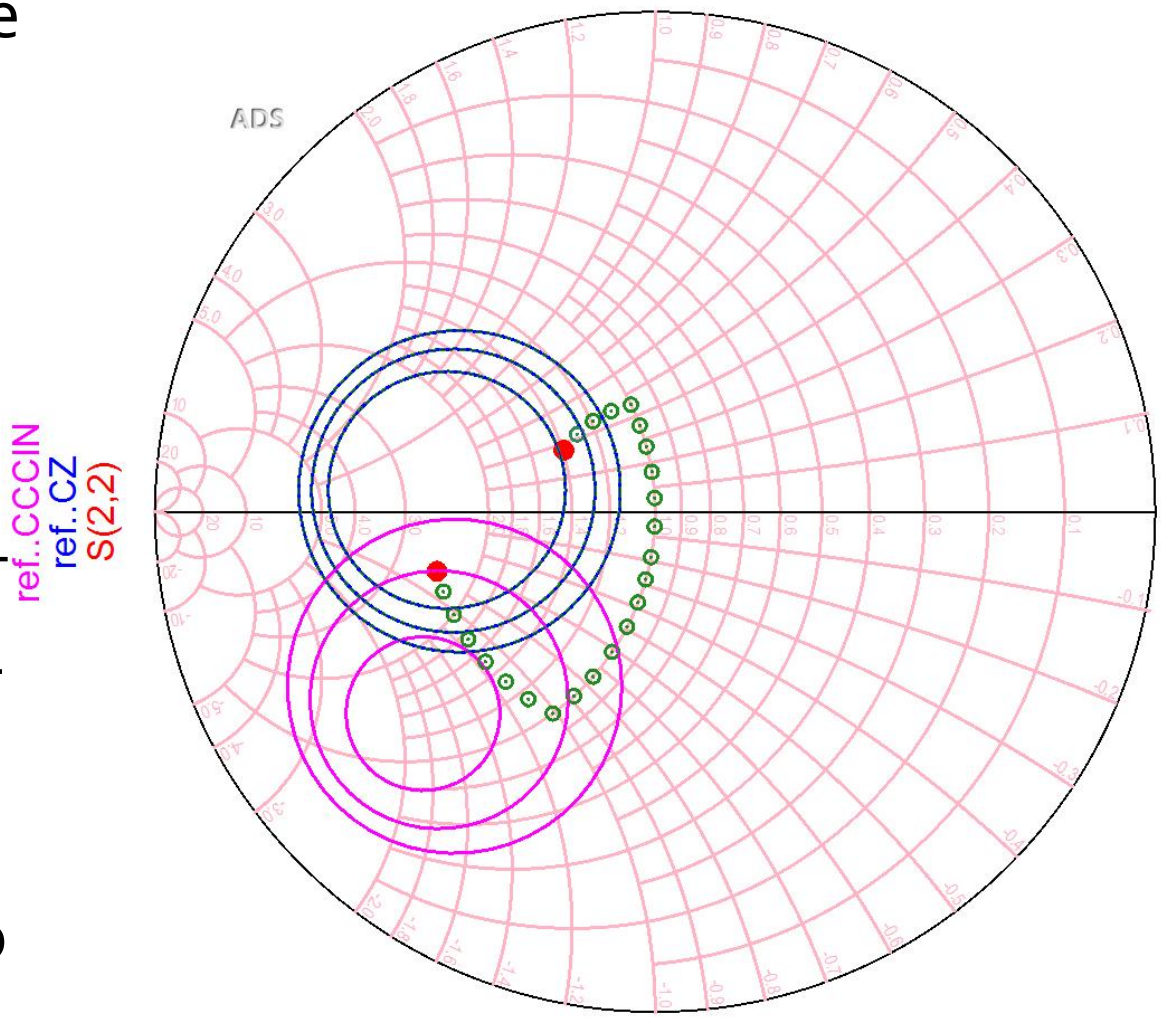

Output matching stage 1 (L1)

- **G_{L1}** (we use the same point <- output L2), **0.2dB**

$$\Gamma_L = 0.186\angle -132.9^\circ \qquad |\Gamma_L| = 0.186; \quad \varphi = -132.9^\circ$$

$$\cos(\varphi + 2\theta) = -|\Gamma_L| \qquad \mathrm{Im}[y_L(\theta)] = \frac{-2\cdot|\Gamma_L|}{\sqrt{1-|\Gamma_L|^2}} = -0.379$$

$$\cos(\varphi + 2\theta) = -0.186 \Rightarrow \quad (\varphi + 2\theta) = \pm 100.72^\circ$$

- the length of the shunt stub θ_{sp} is not calculated because it is **not** needed

$$(\varphi + 2\theta) = \begin{cases} +100.72^\circ \\ -100.72^\circ \end{cases} \quad \theta = \begin{cases} 116.8^\circ \\ 16.1^\circ \end{cases} \quad \mathrm{Im}[y_L(\theta)] = \begin{cases} -0.379 \\ +0.379 \end{cases}$$

Output matching stage 1 (L1)

Equation	Solution L1A	Solution L1B
$\Phi+2\theta$	$+100.72°$	$-100.72°$
θ	$116.8°$	$16.1°$
$\mathrm{Im}[y(\theta)]$	-0.379	$+0.379$

Verify stage 1

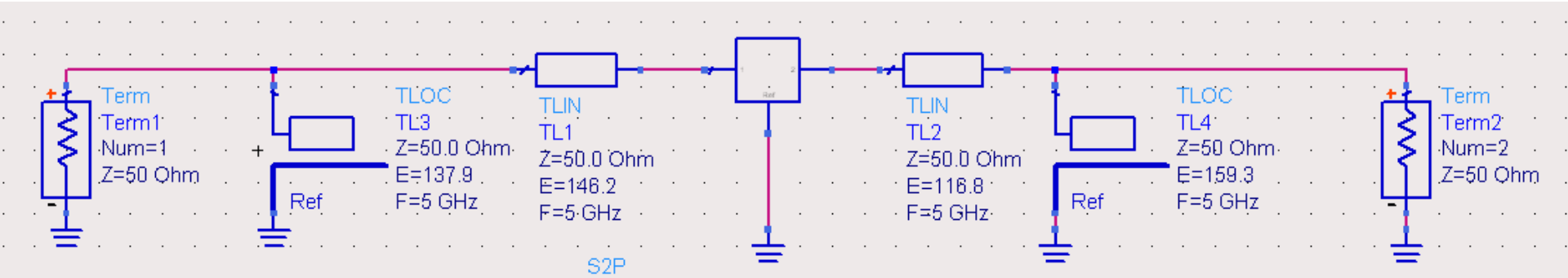

G_{S1} G_o G_{L1}

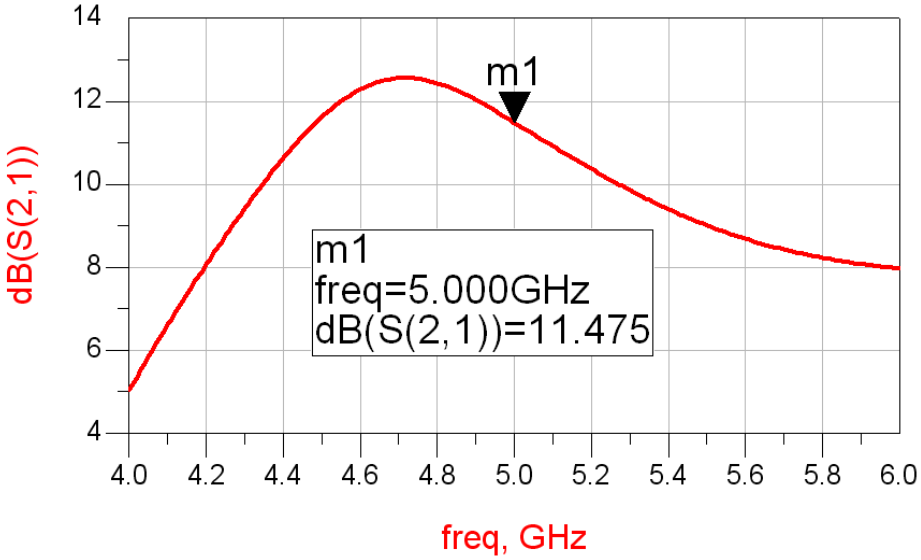

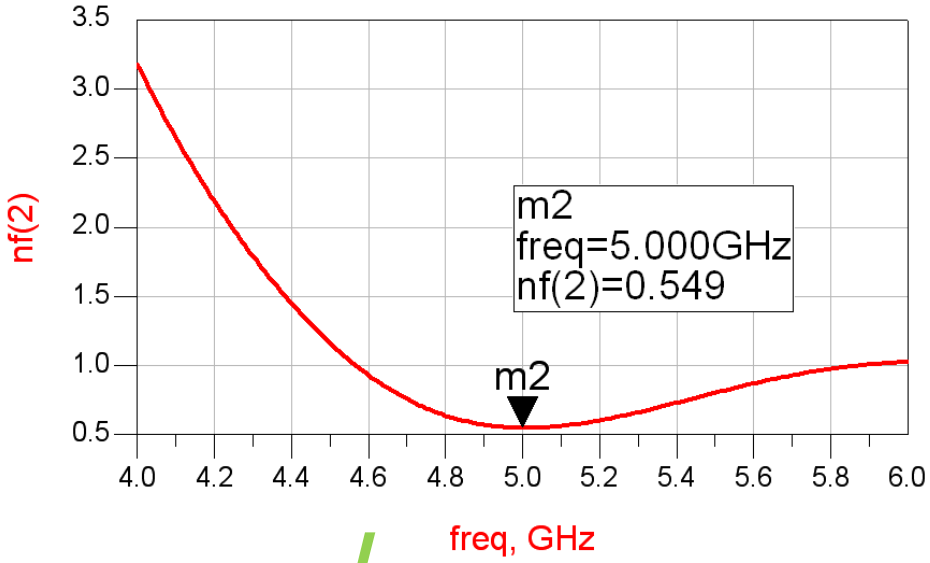

F1 < 0.7 dB, G1 > 9 dB √

Input matching stage 2 (S2)

- G_{S2} (moving from Γ_{S2} we choose towards complex plane origin – **m3** – gain 2dB)

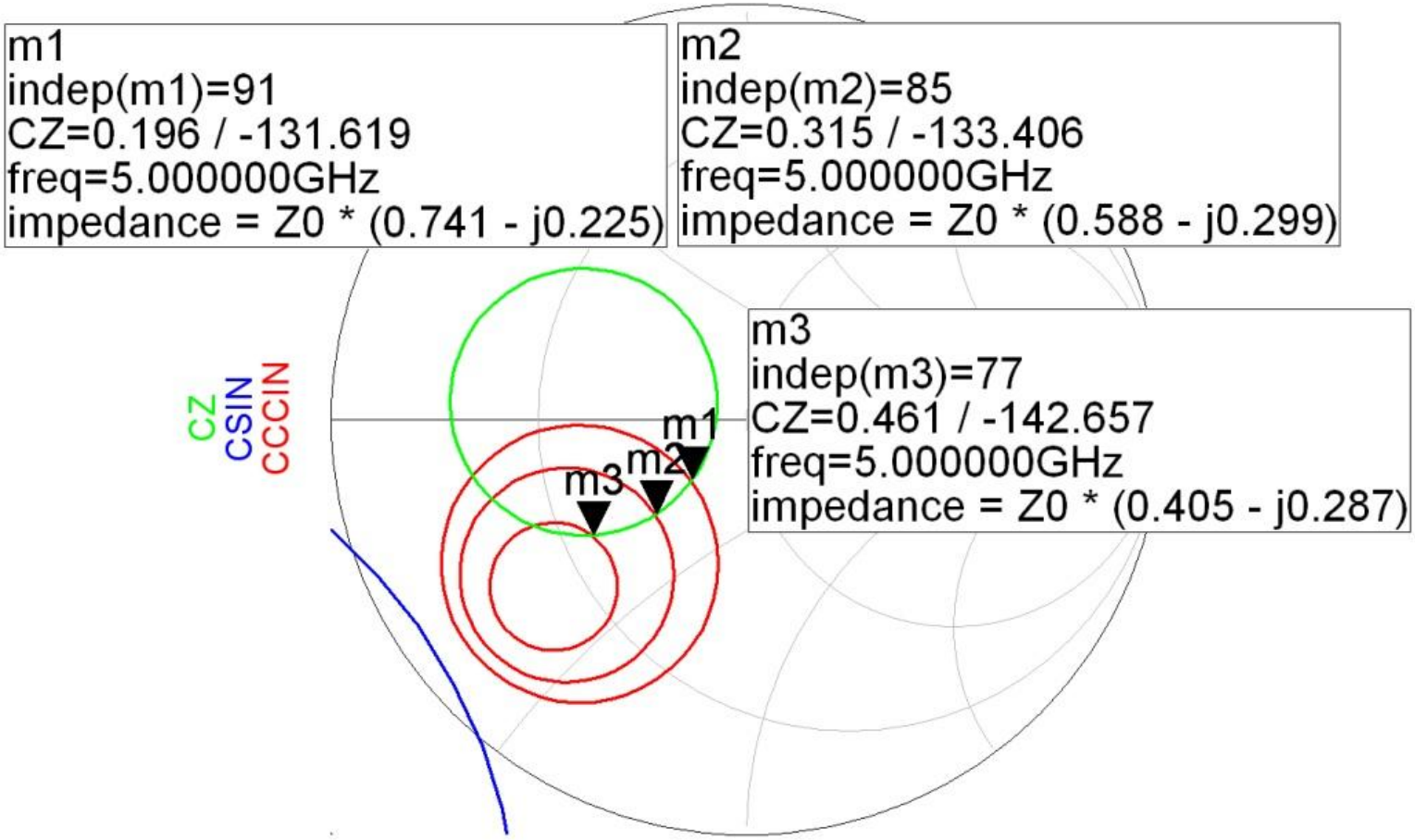

Input matching stage 2 (S2)

- **G_{S2}** (going from m3 towards origin), **2dB**

$$\Gamma_{S2} = 0.461\angle -142.66^\circ \qquad |\Gamma_{S2}| = 0.461; \quad \varphi = -142.66^\circ$$

$$\cos(\varphi + 2\theta) = -|\Gamma_{S2}| \qquad \mathrm{Im}[y_{S2}(\theta)] = \frac{\mp 2 \cdot |\Gamma_{S2}|}{\sqrt{1 - |\Gamma_{S2}|^2}}$$

$$\cos(\varphi + 2\theta) = -0.461 \Rightarrow \qquad (\varphi + 2\theta) = \pm 117.45^\circ$$

- the length of the shunt stub θ_{sp} is not calculated because it is **not** needed

$$(\varphi + 2\theta) = \begin{cases} +117.45^\circ \\ -117.45^\circ \end{cases} \quad \theta = \begin{cases} 130.1^\circ \\ 12.6^\circ \end{cases} \quad \mathrm{Im}[y_{S2}(\theta)] = \begin{cases} -1.039 \\ +1.039 \end{cases}$$

Input matching stage 2 (S2)

Equation	Solution S2A	Solution S2B
$\Phi+2\theta$	$+117.45°$	$-117.45°$
θ	$130.1°$	$12.6°$
$\mathrm{Im}[y(\theta)]$	-1.039	$+1.039$

Verify stage 2

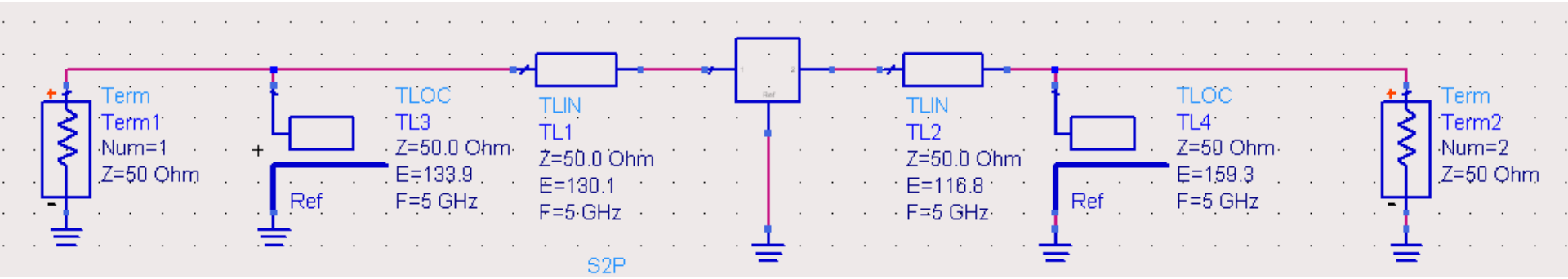

G_{S1} G_o G_{L1}

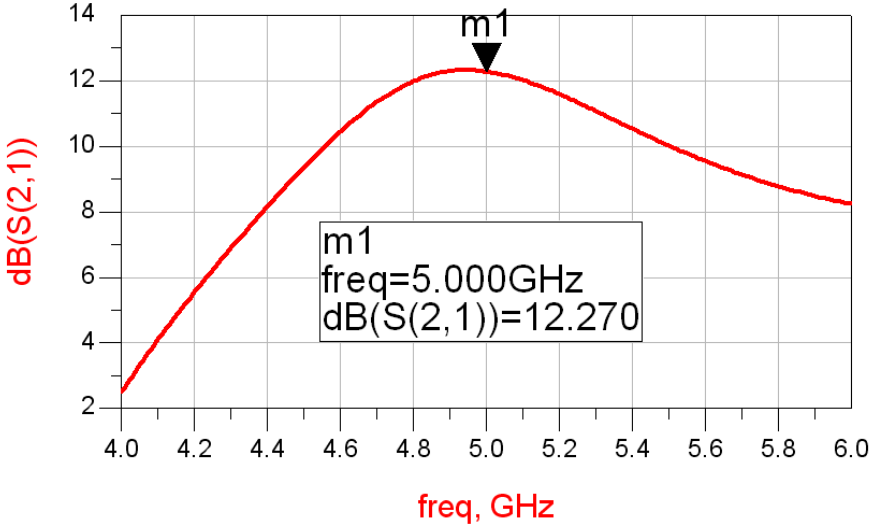

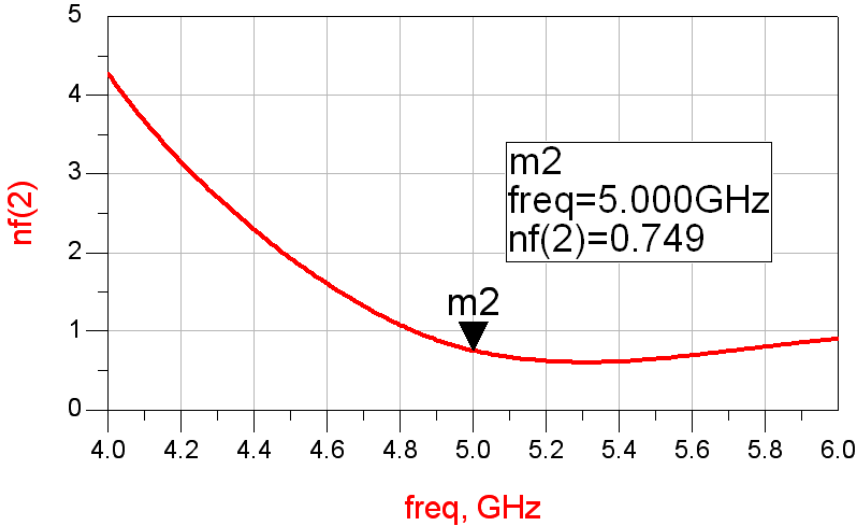

F2 < 1.2 dB, G2 < 13 dB X G1 = 11.5dB, G2 = 12.3dB, G1+G2 > 22dB √

Stage 1/2

- According to the conclusions of the Friis formula, the second stage obtains a higher gain because a higher noise is acceptable.

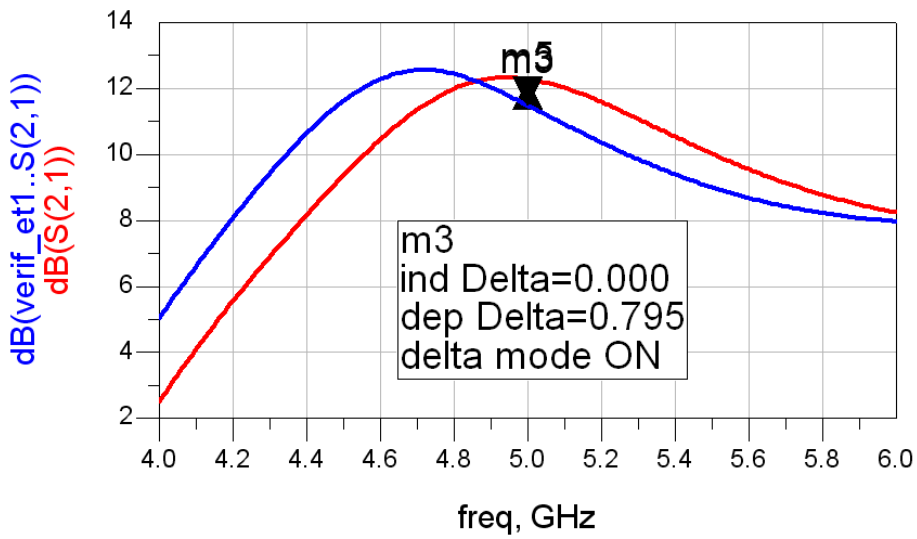

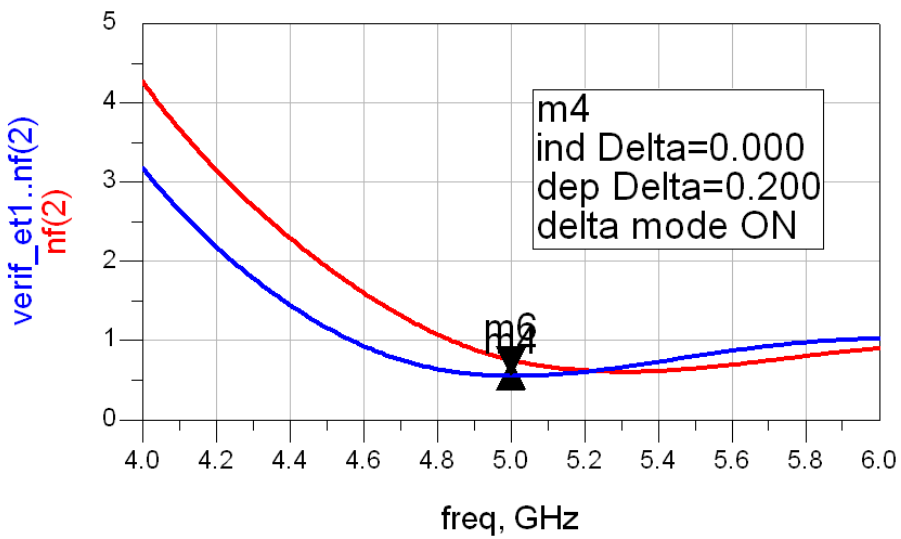

Merging the two shunt stubs

- **The two shunt stubs merge into a single one**
- There are **4 possible combinations** depending on how we chose the electrical length for the two series lines
  - for each chosen electric length (θ) the corresponding Im[y(θ)] must be used
- Ex:

$$\theta_{L1} = 116.8° \qquad \theta_{S2} = 130.1° \qquad \mathrm{Im}\left[y_{sp}\right] = \mathrm{Im}\left[y_{L1}(\theta)\right] + \mathrm{Im}\left[y_{S2}(\theta)\right] = -1.418$$

$$\theta_{sp} = \tan^{-1}\left(\mathrm{Im}\left[y_{sp}\right]\right) \qquad \theta_{sp} = 125.2°$$

Merging the two shunt stubs

- 4 possible combinations
  - the **admittances** are in parallel and **add** up, not the electrical lengths

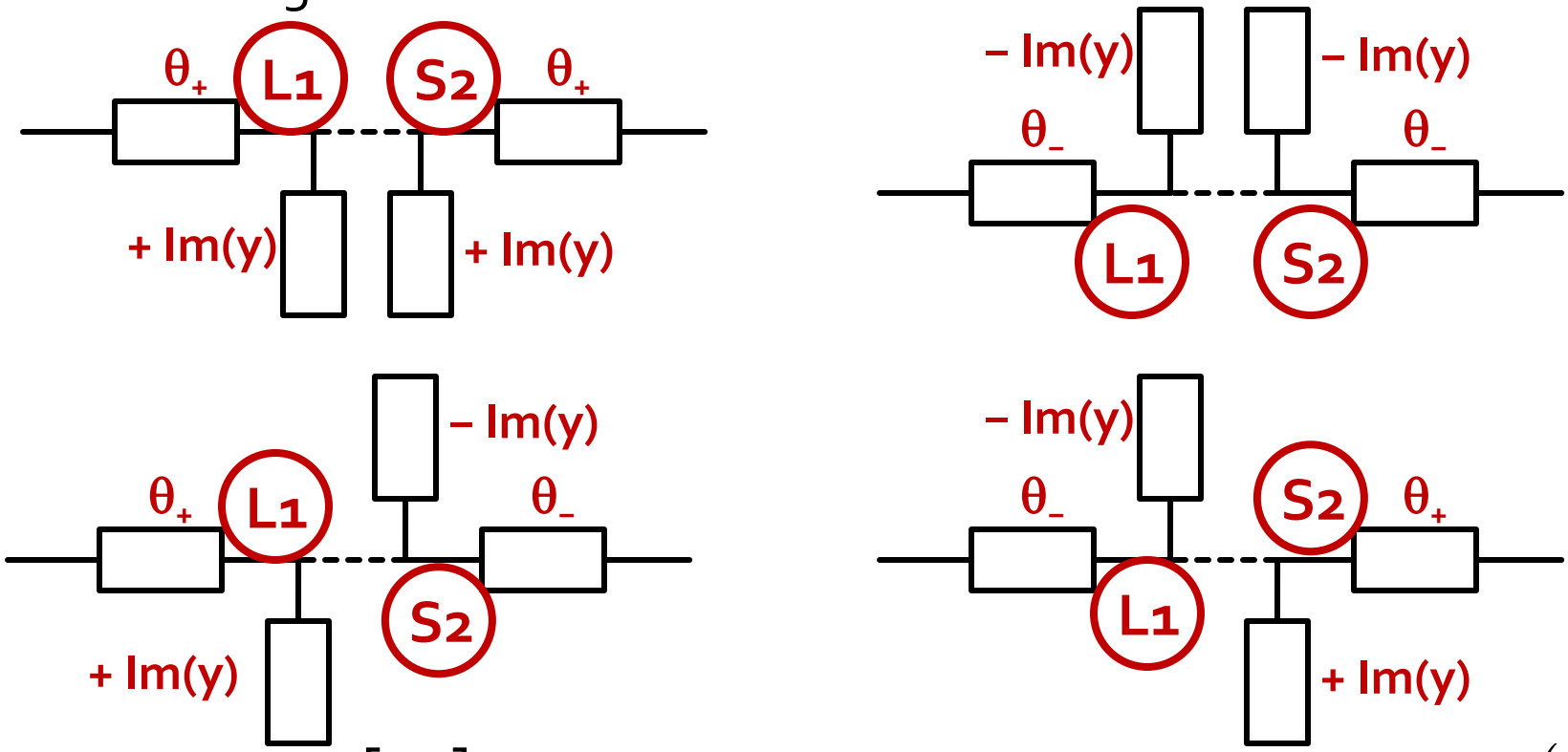

$$\mathrm{Im}\left[y_{sp}\right] = \mathrm{Im}\left[y_{L1}(\theta)\right] + \mathrm{Im}\left[y_{S2}(\theta)\right]$$

$$\theta_{sp} = \tan^{-1}\left(\mathrm{Im}\left[y_{sp}\right]\right)$$

Merging the two shunt stubs

		Solution S2A	Solution S2B
		θ =130.1° Im[y(θ)] = -1.039	θ =12.6° Im[y(θ)] = +1.039
Solution L1A	θ = 116.8° Im[y(θ)] = -0.379	θ_{L1} =116.8° + Im[y(θ)] = -1.418 θ_p =125.2° θ_{S2} =130.1°	θ_{L1} =116.8° + Im[y(θ)] = +0.66 θ_p =33.4° θ_{S2} =12.6°
Solution L1B	θ =16.1° Im[y(θ)] = +0.379	θ_{L1} =16.1° + Im[y(θ)] = -0.66 θ_p =146.6° θ_{S2} =130.1°	θ_{L1} =16.1° + Im[y(θ)] = 1.418 θ_p =54.8° θ_{S2} =12.6°

Smith Chart

- series line → moves around the center of the SC
- shunt stub → on the circle g=1

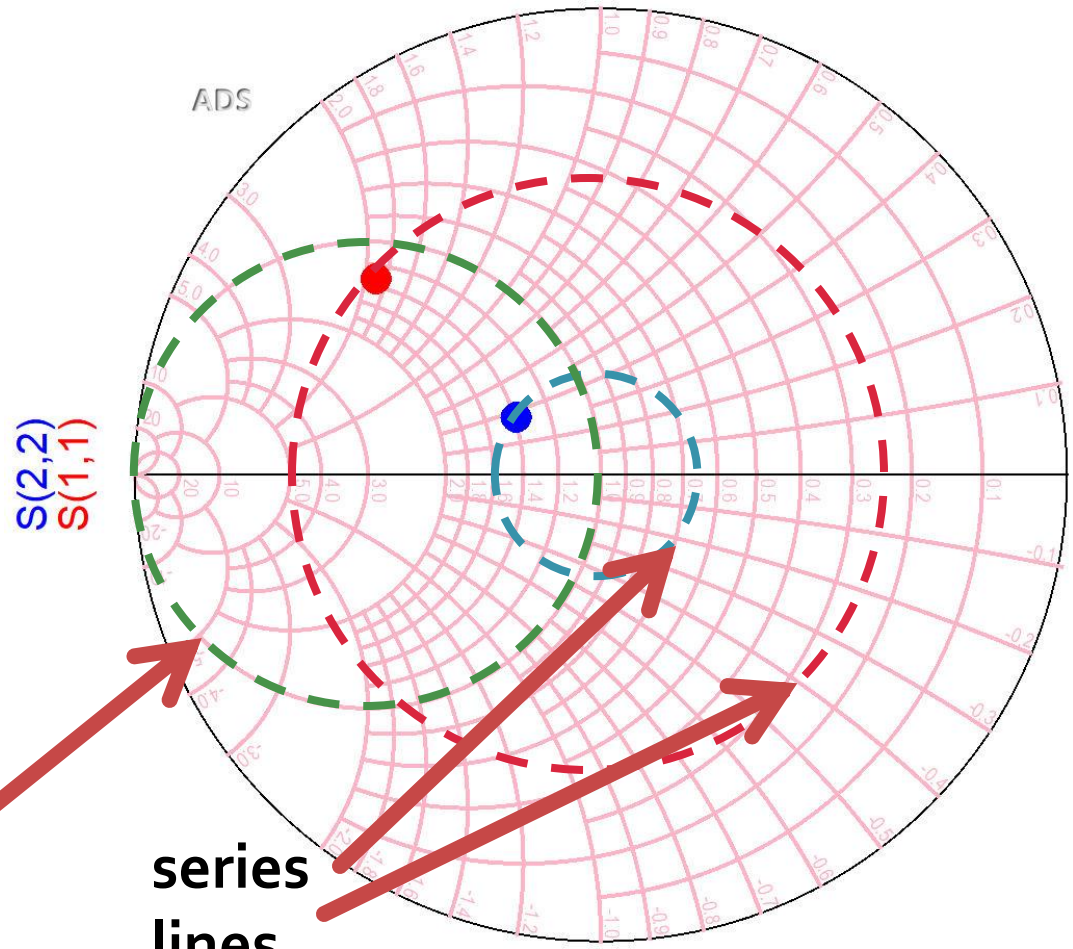

shunt stub

series lines

Merge 1, Smith Chart

$$\theta_{L1} = 116.8° \qquad \theta_{S2} = 130.1°$$

$$\mathrm{Im}[y_{sp}] = \mathrm{Im}[y_{L1}(\theta)] + \mathrm{Im}[y_{S2}(\theta)] = -1.418$$

$$\theta_{sp} = 125.2°$$

linii serie

stub "combinat"

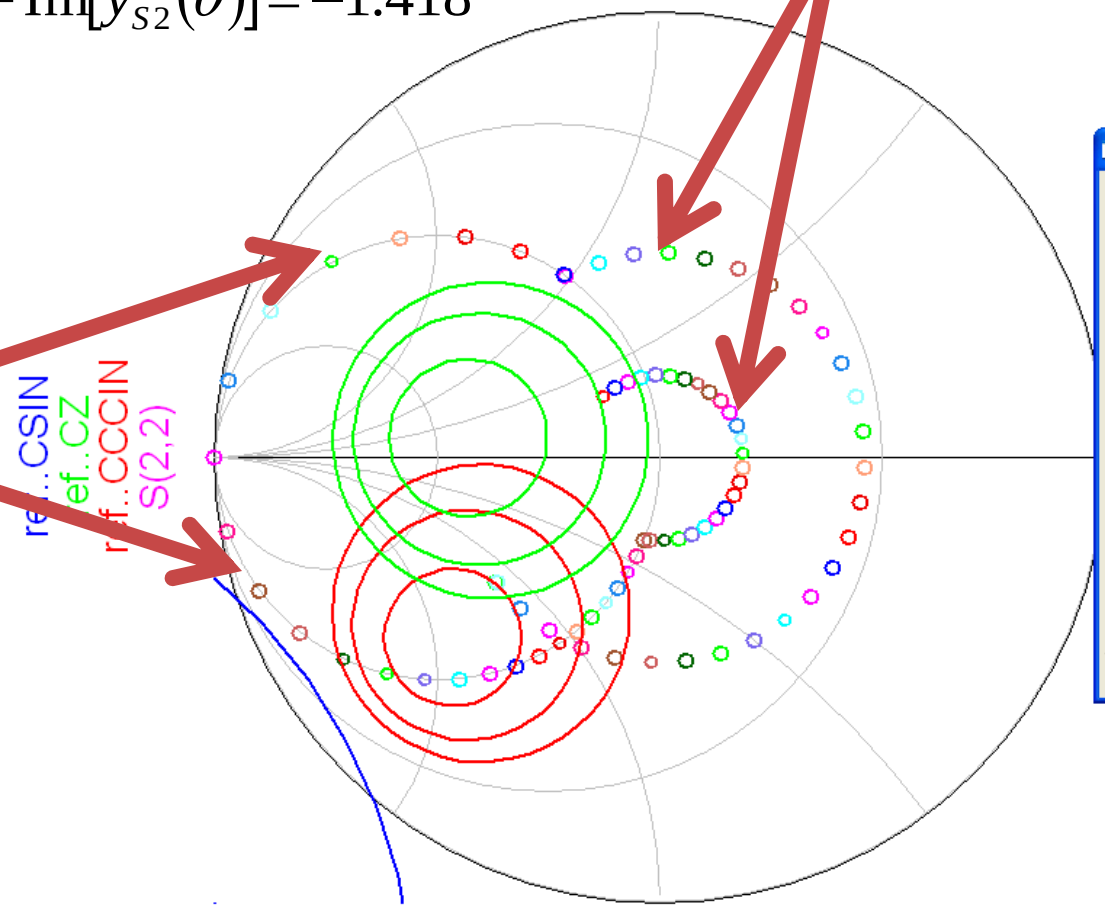

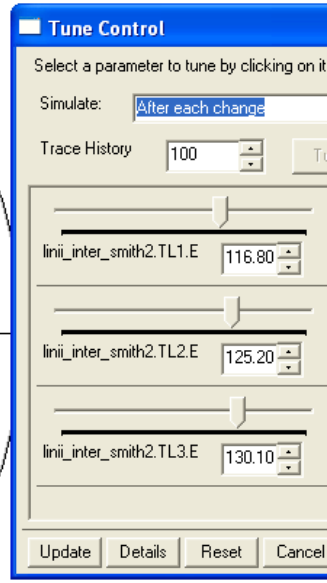

Merge 1, ADS

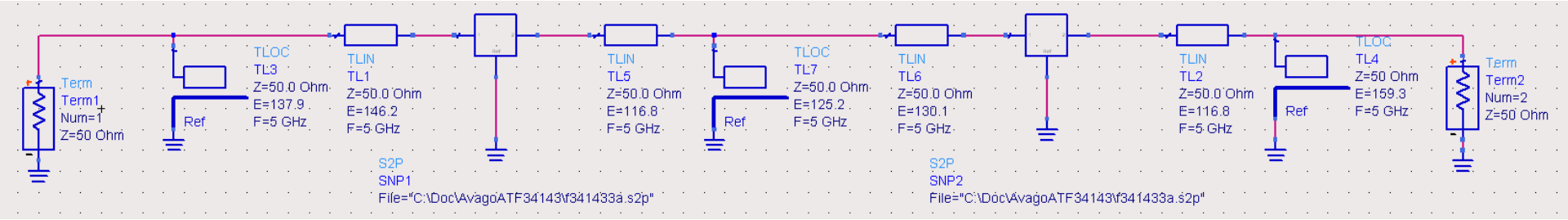
Term
Term1
Num=1
Z=50 Ohm
Ref
TLOC
TL3
Z=50.0 Ohm
E=137.9
F=5 GHz
TLIN
TL1
Z=50.0 Ohm
E=146.2
F=5 GHz
S2P
SNP1
File="C:\Doc\AvagoATF34143\f341433a.s2p"
TLIN
TL5
Z=50.0 Ohm
E=116.8
F=5 GHz
Ref
TLOC
TL7
Z=50.0 Ohm
E=125.2
F=5 GHz
TLIN
TL6
Z=50.0 Ohm
E=130.1
F=5 GHz
S2P
SNP2
File="C:\Doc\AvagoATF34143\f341433a.s2p"
TLIN
TL2
Z=50.0 Ohm
E=116.8
F=5 GHz
Ref
TLOC
TL4
Z=50 Ohm
E=159.3
F=5 GHz
Term
Term2
Num=2
Z=50 Ohm

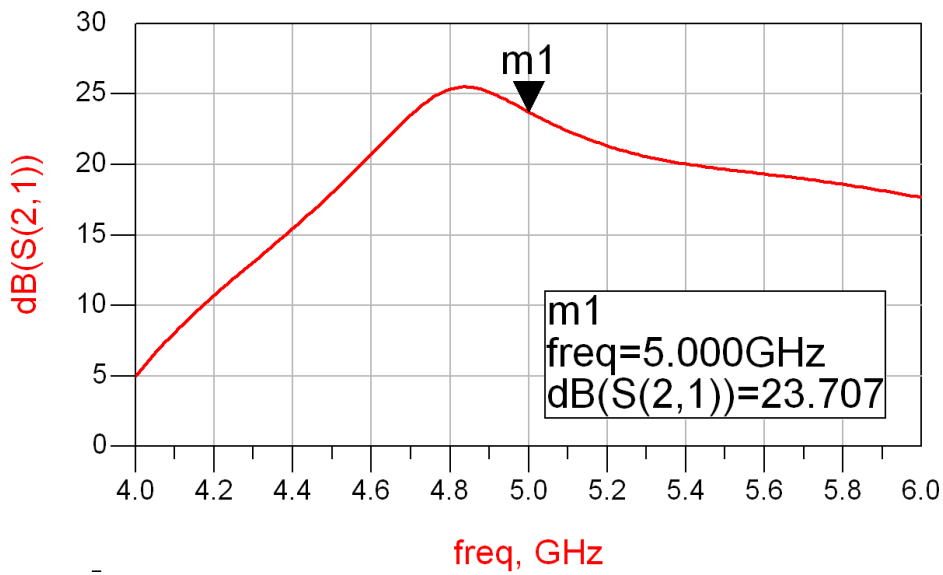
dB(S(2,1))
30
25
20
15
10
5
0
4.0
4.2
4.4
4.6
4.8
5.0
5.2
5.4
5.6
5.8
6.0
freq, GHz
m1
m1
freq=5.000GHz
dB(S(2,1))=23.707

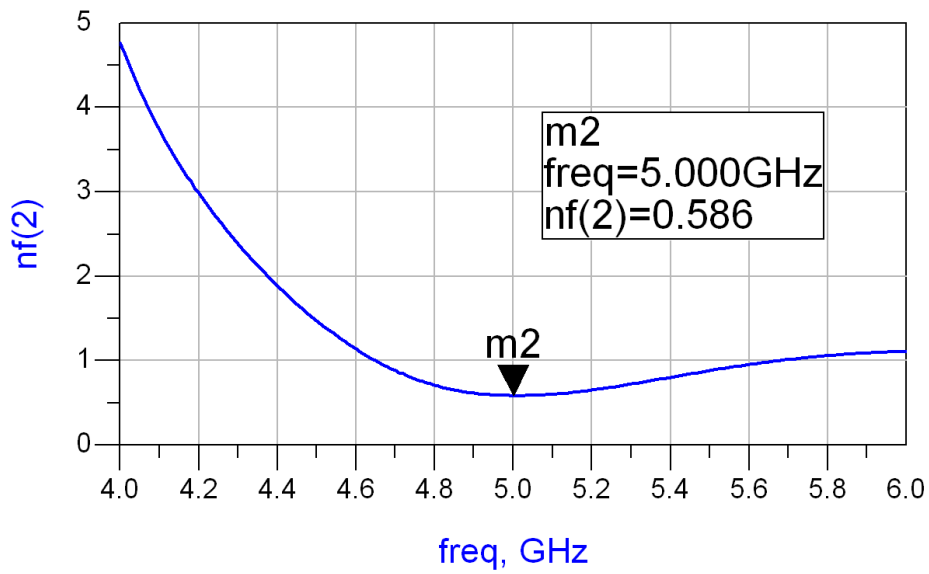
nf(2)
5
4
3
2
1
0
4.0
4.2
4.4
4.6
4.8
5.0
5.2
5.4
5.6
5.8
6.0
freq, GHz
m2
m2
freq=5.000GHz
nf(2)=0.586

Merge 2, Smith Chart

$$\theta_{L1} = 116.8^\circ \qquad \theta_{S2} = 12.6^\circ$$

$$\mathrm{Im}[y_{sp}] = \mathrm{Im}[y_{L1}(\theta)] + \mathrm{Im}[y_{S2}(\theta)] = +0.66$$

$$\theta_{sp} = 33.4^\circ$$

linii serie

stub "combinat"

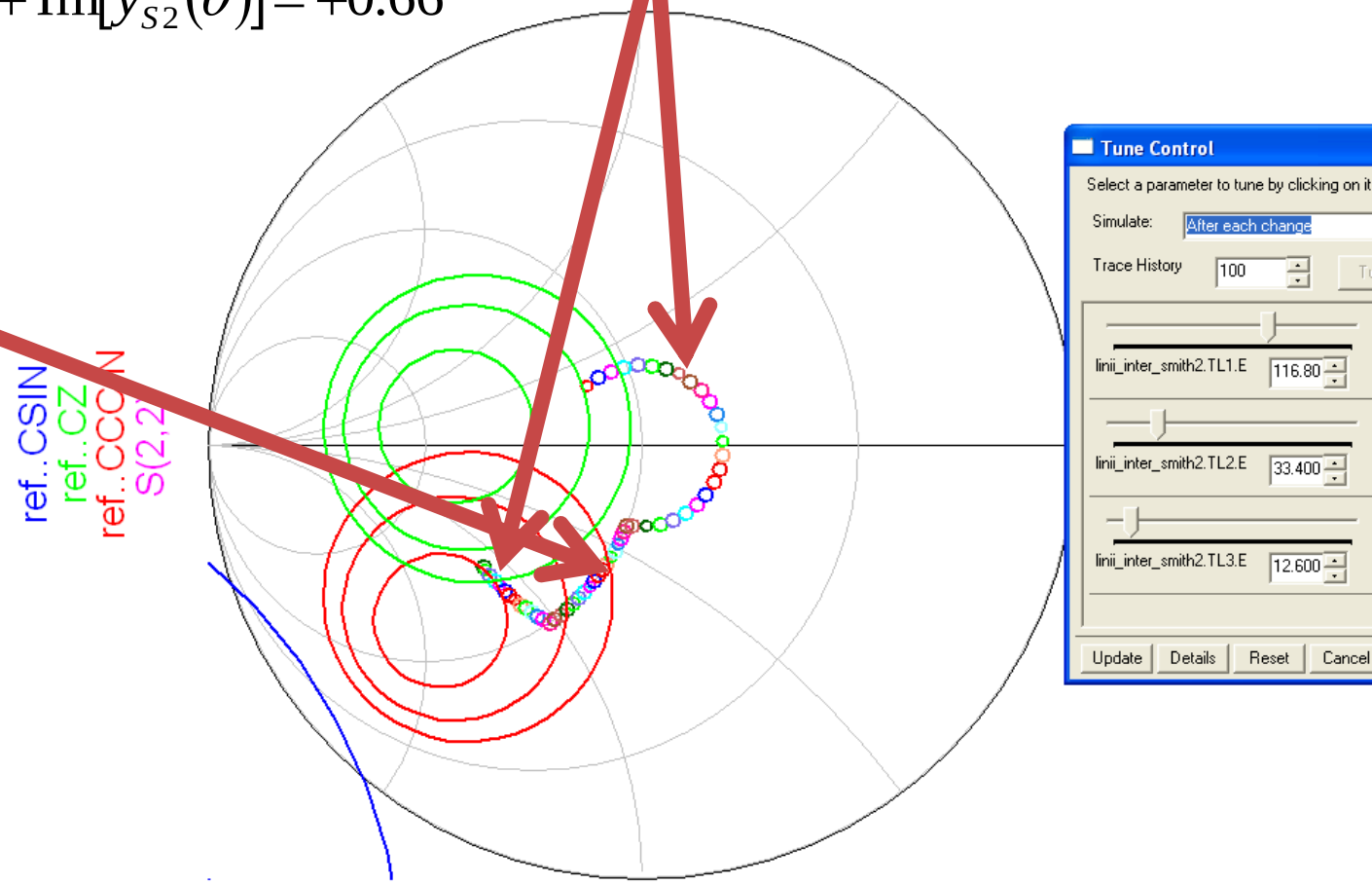

Merge 2, ADS

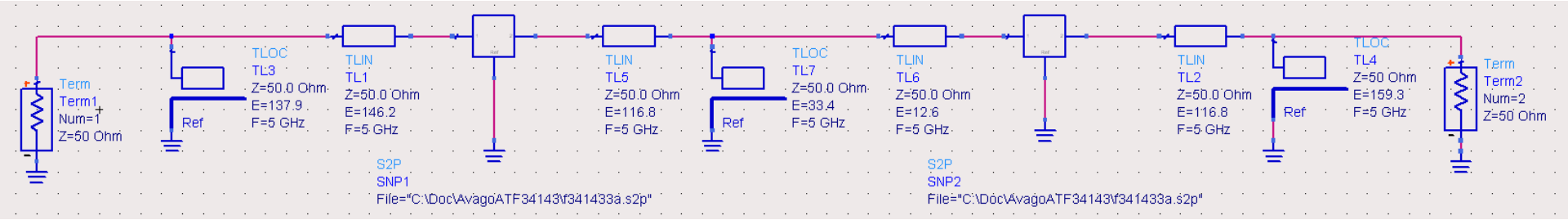
Term
Term1
Num=1
Z=50 Ohm
Ref
TLOC
TL3
Z=50.0 Ohm
E=137.9
F=5 GHz
TLIN
TL1
Z=50.0 Ohm
E=146.2
F=5 GHz
S2P
SNP1
File="C:\Doc\AvagoATF34143\f341433a.s2p"
TLIN
TL5
Z=50.0 Ohm
E=116.8
F=5 GHz
Ref
TLOC
TL7
Z=50.0 Ohm
E=33.4
F=5 GHz
TLIN
TL6
Z=50.0 Ohm
E=12.6
F=5 GHz
S2P
SNP2
File="C:\Doc\AvagoATF34143\f341433a.s2p"
TLIN
TL2
Z=50.0 Ohm
E=116.8
F=5 GHz
Ref
TLOC
TL4
Z=50 Ohm
E=159.3
F=5 GHz
Term
Term2
Num=2
Z=50 Ohm

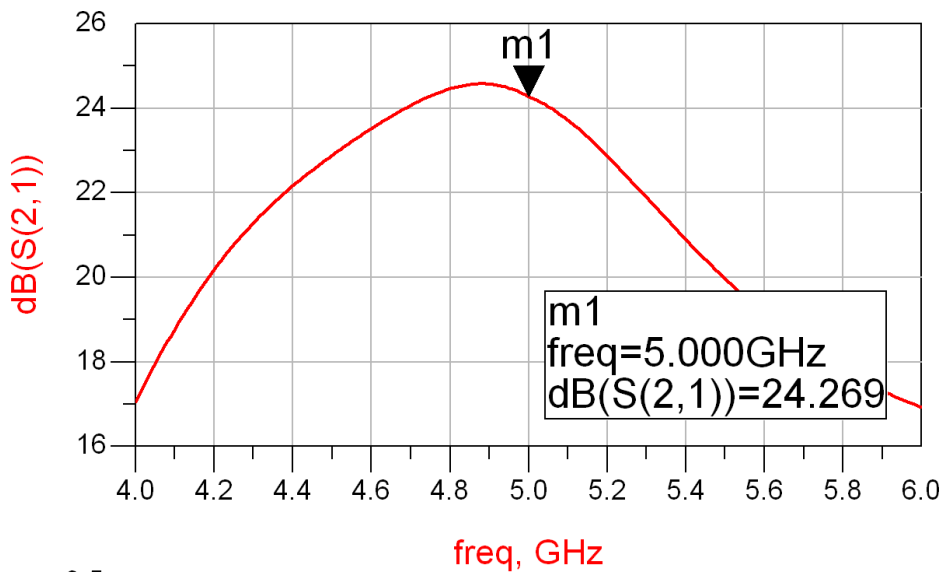
m1
m1
freq=5.000GHz
dB(S(2,1))=24.269
dB(S(2,1))
freq, GHz
26
24
22
20
18
16
4.0
4.2
4.4
4.6
4.8
5.0
5.2
5.4
5.6
5.8
6.0

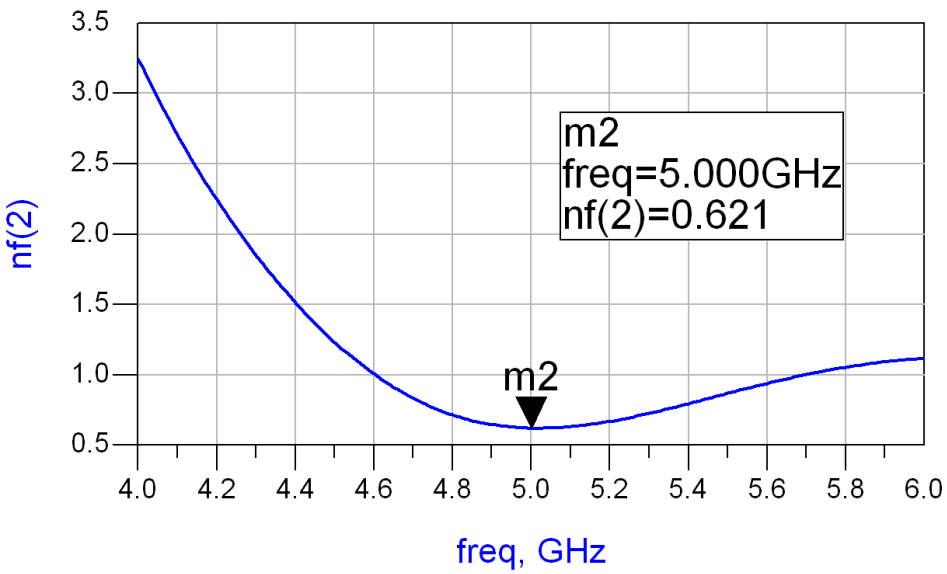
m2
freq=5.000GHz
nf(2)=0.621
m2
nf(2)
freq, GHz
3.5
3.0
2.5
2.0
1.5
1.0
0.5
4.0
4.2
4.4
4.6
4.8
5.0
5.2
5.4
5.6
5.8
6.0

Merge 3, Smith Chart

$$\theta_{L1} = 16.1^\circ \qquad \theta_{S2} = 130.1^\circ$$

$$\mathrm{Im}[y_{sp}] = \mathrm{Im}[y_{L1}(\theta)] + \mathrm{Im}[y_{S2}(\theta)] = -0.66$$

$$\theta_{sp} = 146.6^\circ$$

linii serie

stub "combinat"

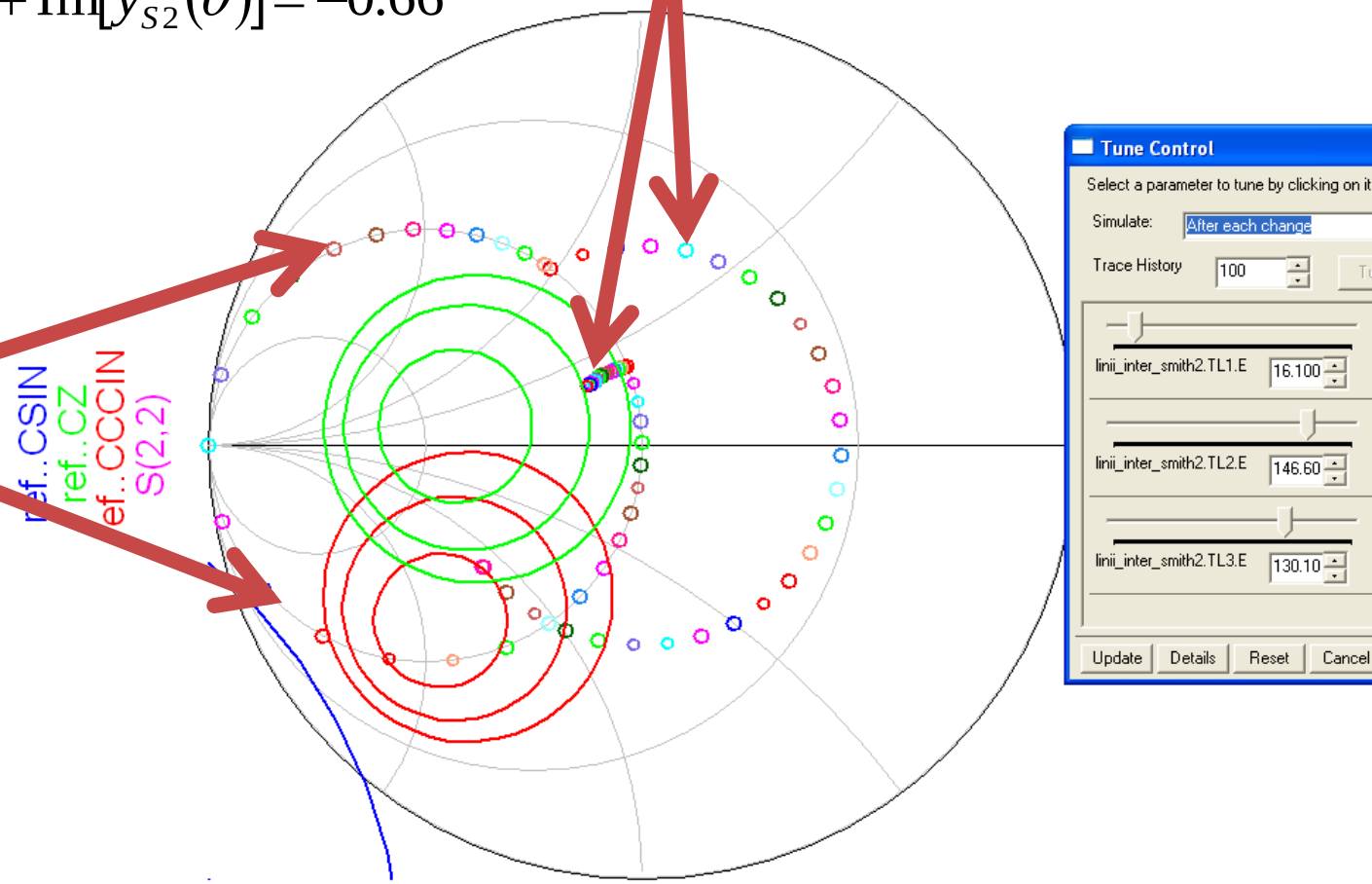

Merge 3, ADS

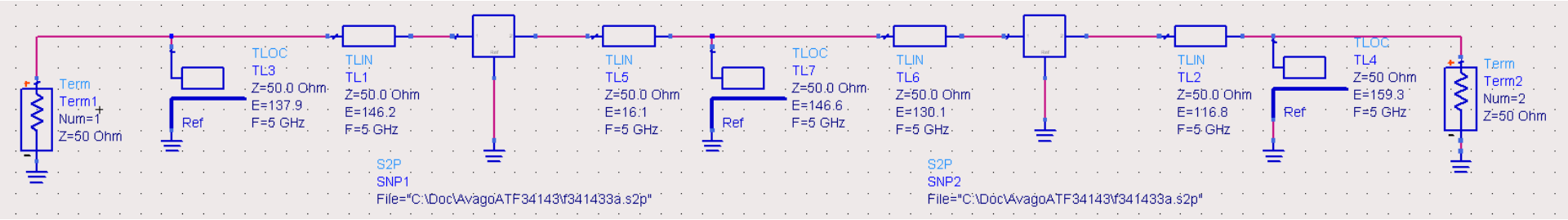
Term
Term1
Num=1
Z=50 Ohm
Ref
TLOC
TL3
Z=50.0 Ohm
E=137.9
F=5 GHz
TLIN
TL1
Z=50.0 Ohm
E=146.2
F=5 GHz
S2P
SNP1
File="C:\Doc\AvagoATF34143\f341433a.s2p"
TLIN
TL5
Z=50.0 Ohm
E=16.1
F=5 GHz
Ref
TLOC
TL7
Z=50.0 Ohm
E=146.6
F=5 GHz
TLIN
TL6
Z=50.0 Ohm
E=130.1
F=5 GHz
S2P
SNP2
File="C:\Doc\AvagoATF34143\f341433a.s2p"
TLIN
TL2
Z=50.0 Ohm
E=116.8
F=5 GHz
Ref
TLOC
TL4
Z=50 Ohm
E=159.3
F=5 GHz
Term
Term2
Num=2
Z=50 Ohm

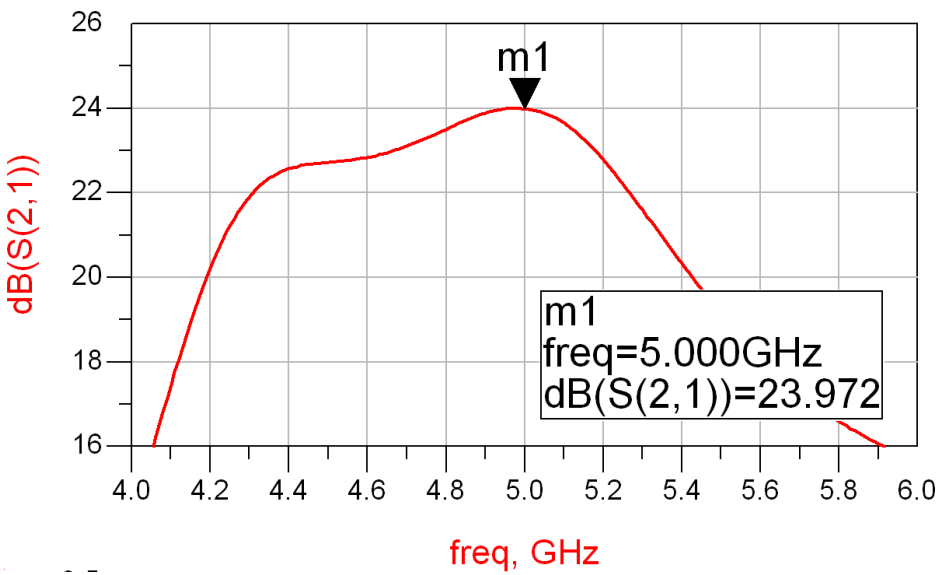
m1
m1
freq=5.000GHz
dB(S(2,1))=23.972
dB(S(2,1))
freq, GHz
26
24
22
20
18
16
4.0
4.2
4.4
4.6
4.8
5.0
5.2
5.4
5.6
5.8
6.0

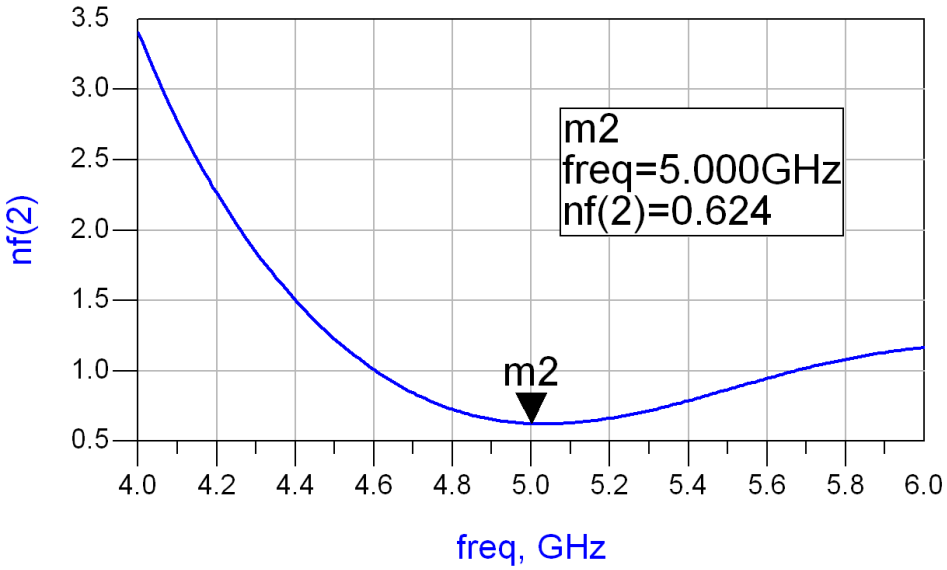
m2
freq=5.000GHz
nf(2)=0.624
m2
nf(2)
freq, GHz
3.5
3.0
2.5
2.0
1.5
1.0
0.5
4.0
4.2
4.4
4.6
4.8
5.0
5.2
5.4
5.6
5.8
6.0

Merge 4, Smith Chart

$$\theta_{L1} = 16.1^\circ \qquad \theta_{S2} = 12.6^\circ$$

$$\mathrm{Im}\left[y_{sp}\right] = \mathrm{Im}\left[y_{L1}(\theta)\right] + \mathrm{Im}\left[y_{S2}(\theta)\right] = +1.418$$

$$\theta_{sp} = 54.8^\circ$$

linii serie

stub "combinat"

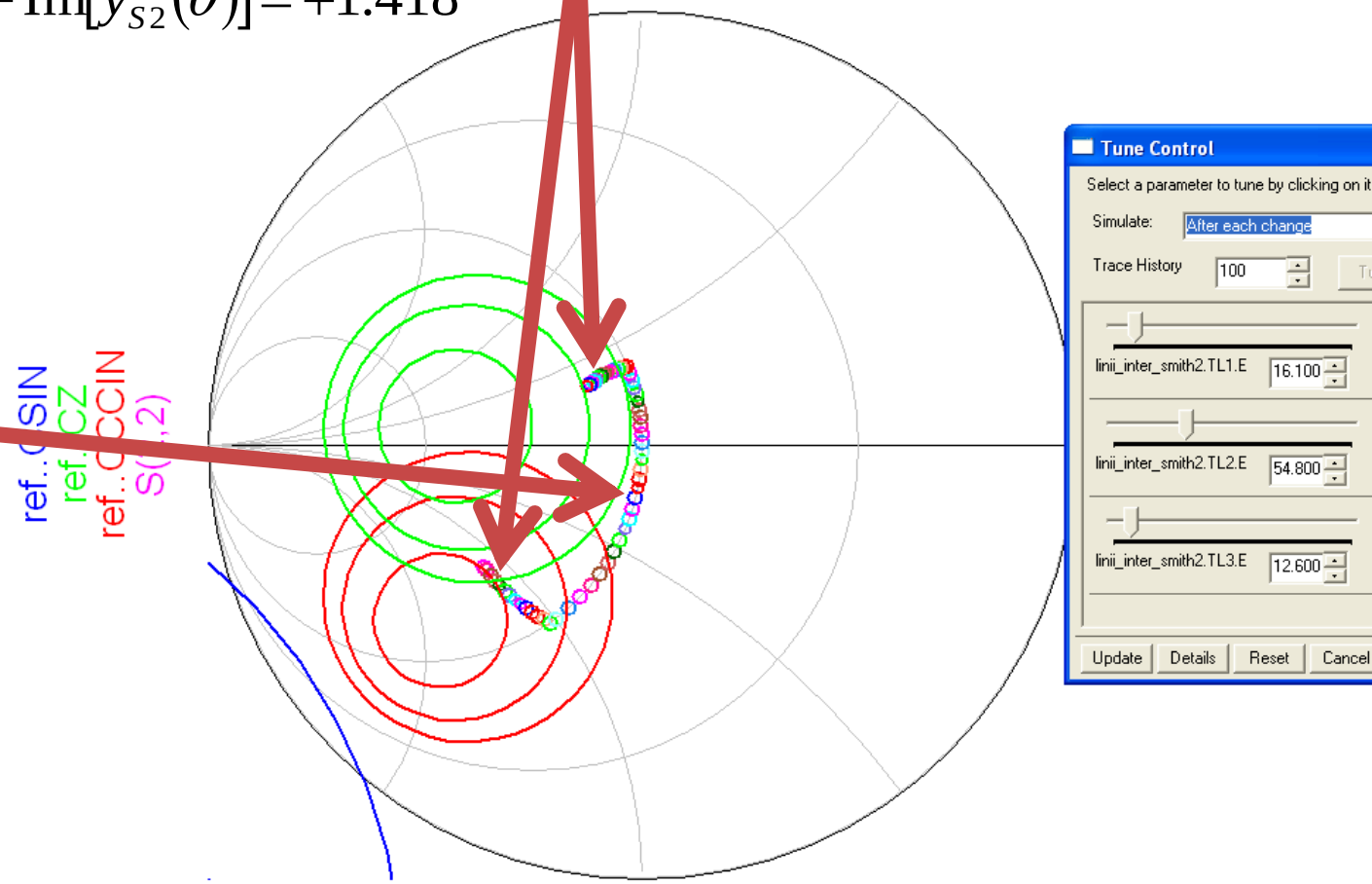

Merge 4, ADS

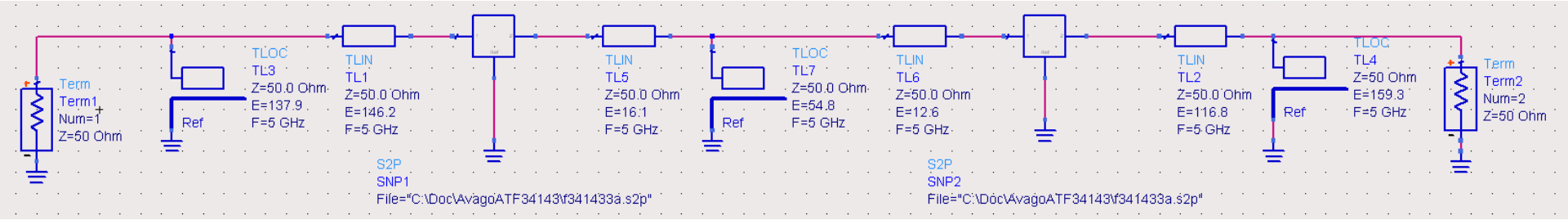
Term
Term1
Num=1
Z=50 Ohm
Ref
TLOC
TL3
Z=50.0 Ohm
E=137.9
F=5 GHz
TLIN
TL1
Z=50.0 Ohm
E=146.2
F=5 GHz
S2P
SNP1
File="C:\Doc\AvagoATF34143\f341433a.s2p"
TLIN
TL5
Z=50.0 Ohm
E=16.1
F=5 GHz
Ref
TLOC
TL7
Z=50.0 Ohm
E=54.8
F=5 GHz
TLIN
TL6
Z=50.0 Ohm
E=12.6
F=5 GHz
S2P
SNP2
File="C:\Doc\AvagoATF34143\f341433a.s2p"
TLIN
TL2
Z=50.0 Ohm
E=116.8
F=5 GHz
Ref
TLOC
TL4
Z=50 Ohm
E=159.3
F=5 GHz
Term
Term2
Num=2
Z=50 Ohm

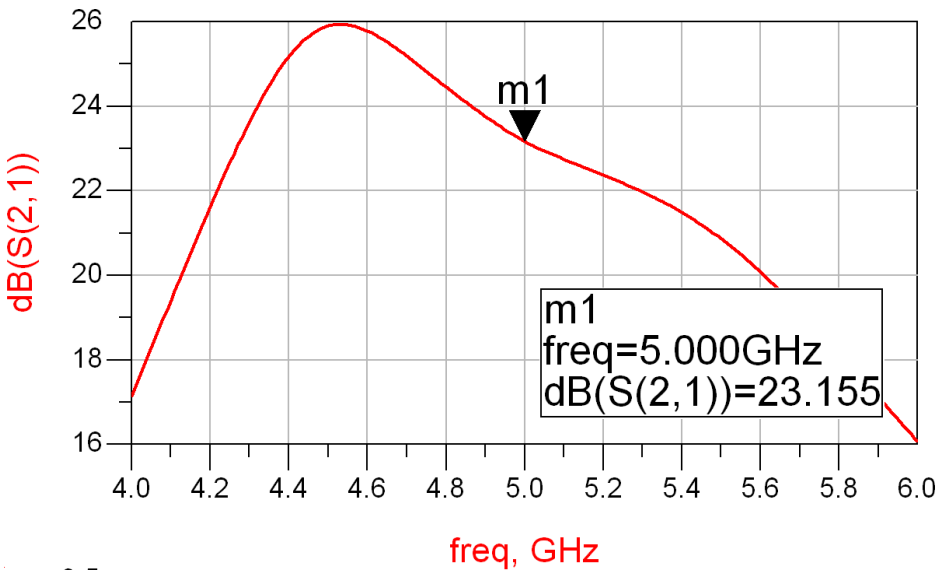
26
24
22
20
18
16
dB(S(2,1))
m1
m1
freq=5.000GHz
dB(S(2,1))=23.155
4.0
4.2
4.4
4.6
4.8
5.0
5.2
5.4
5.6
5.8
6.0
freq, GHz

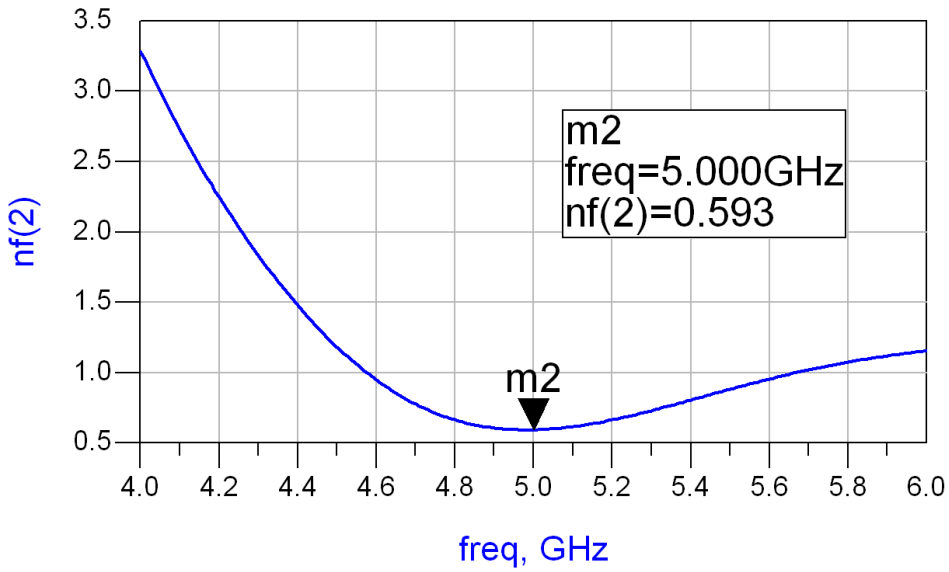
3.5
3.0
2.5
2.0
1.5
1.0
0.5
nf(2)
m2
freq=5.000GHz
nf(2)=0.593
m2
4.0
4.2
4.4
4.6
4.8
5.0
5.2
5.4
5.6
5.8
6.0
freq, GHz

Interstage matching 2

- All the combinations obtained meet the target conditions for gain and noise
- Choose a convenient one depending on:
  - the physical dimensions of the lines $l = \frac{\theta}{360°} \cdot \lambda$
  - frequency bandwidth/flatness
  - stability
  - performance (noise/gain)
  - input and output reflection
  - etc.

Supplement Mini Project

Implementation in microstrip technology

- microstrip lines
  - dielectric layer
  - plane metallization (ground plane)
  - traces which will control:
    - characteristic impedance
    - physical/electrical length

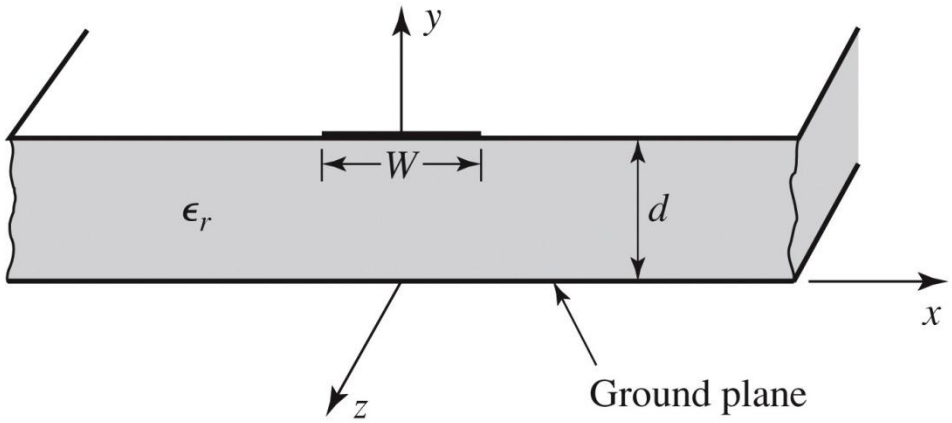

Figure 3.25a

Implementation in microstrip technology

- quasi TEM line

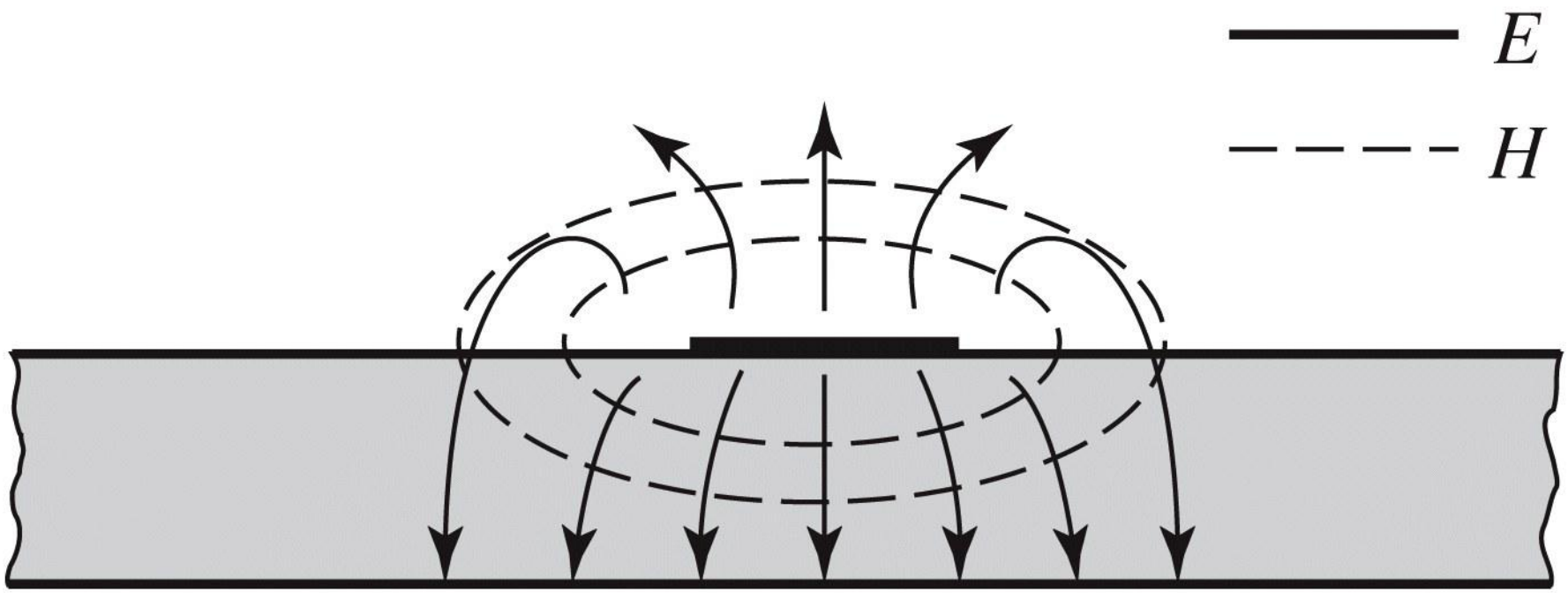

Figure 3.25b

Implementation in microstrip technology

- quasi TEM line, EmPro

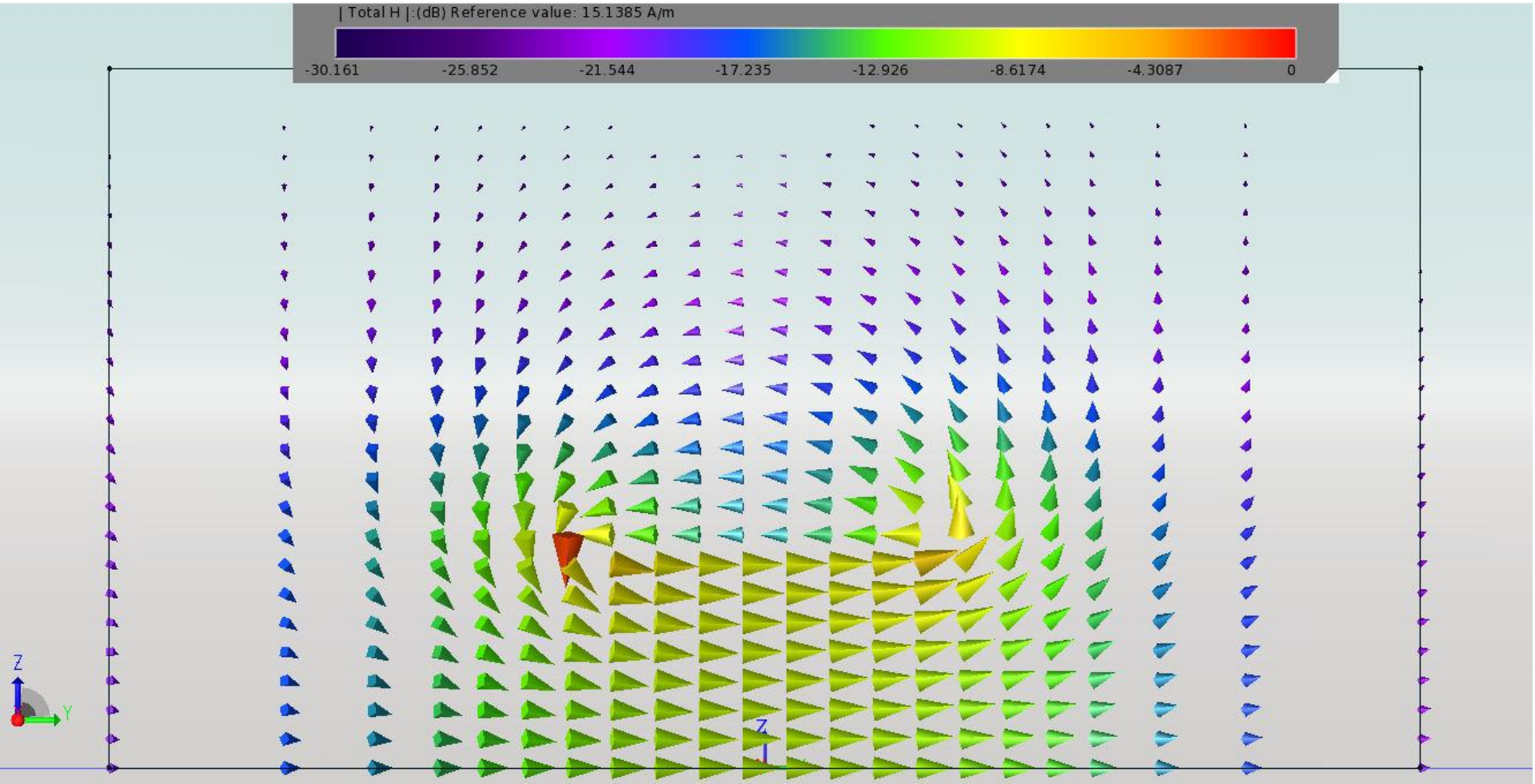

Implementation in microstrip technology

- quasi TEM line, EmPro

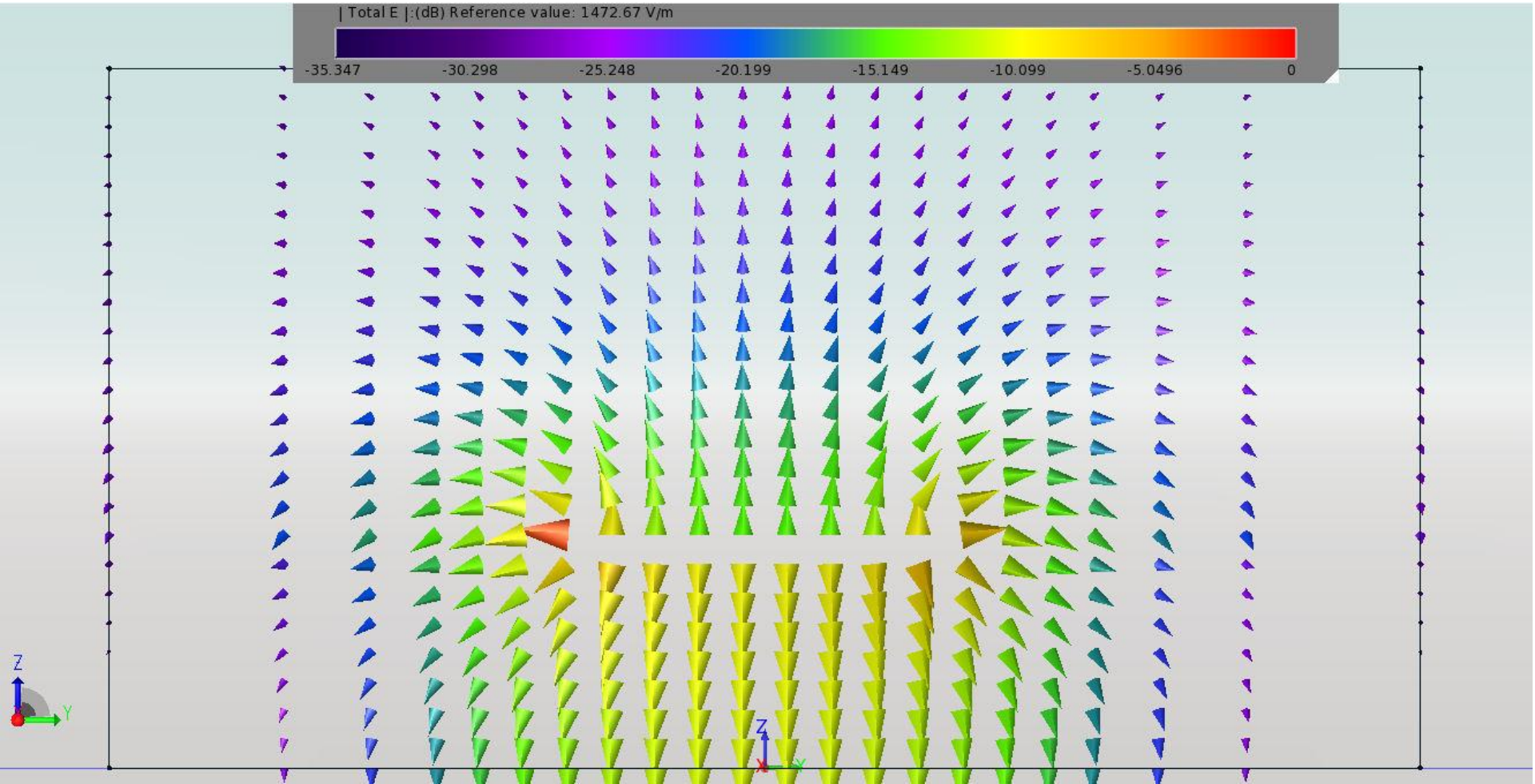

Implementation in microstrip technology

- quasi TEM line, EmPro

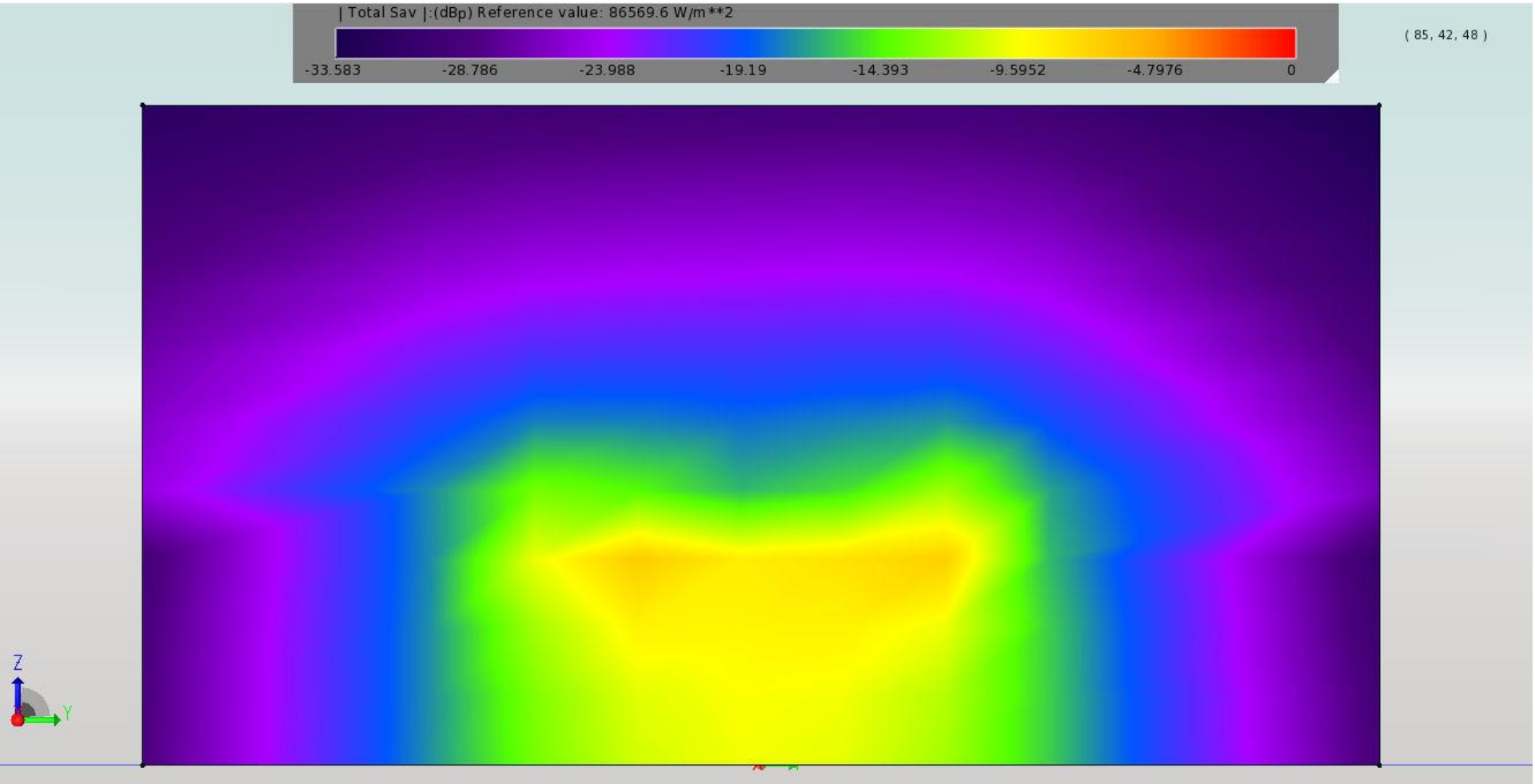

Implementation in microstrip technology

- ~ Aproximativ TEM

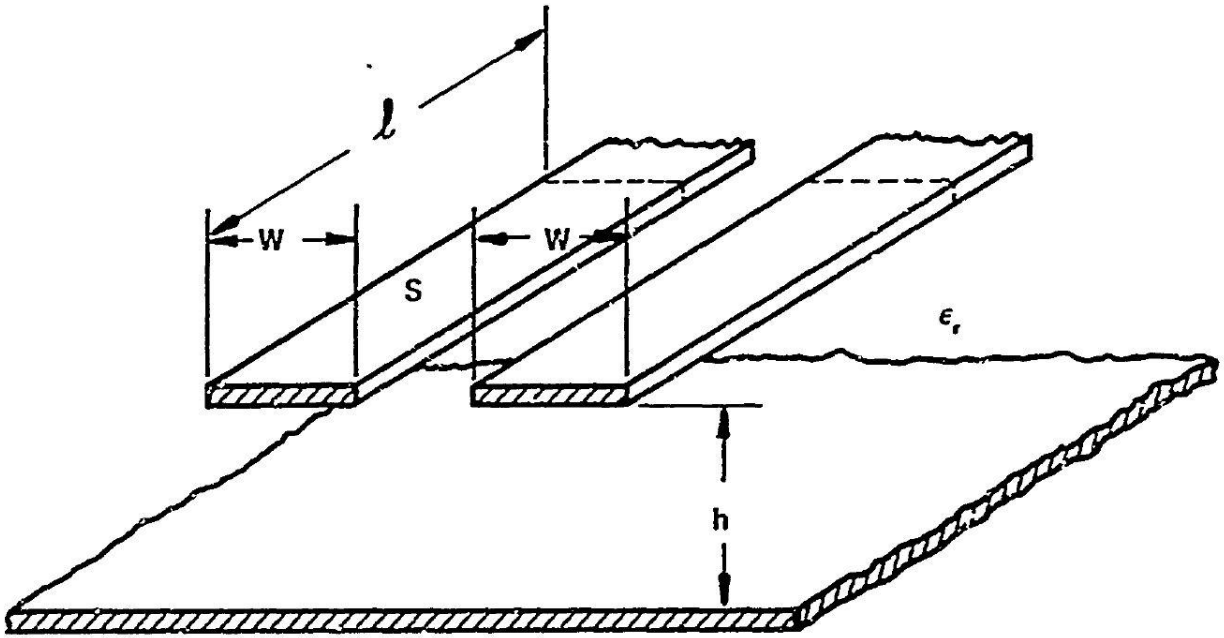

a) COUPLED STRIP GEOMETRY

Implementation in microstrip technology

- ~ Aproximativ TEM

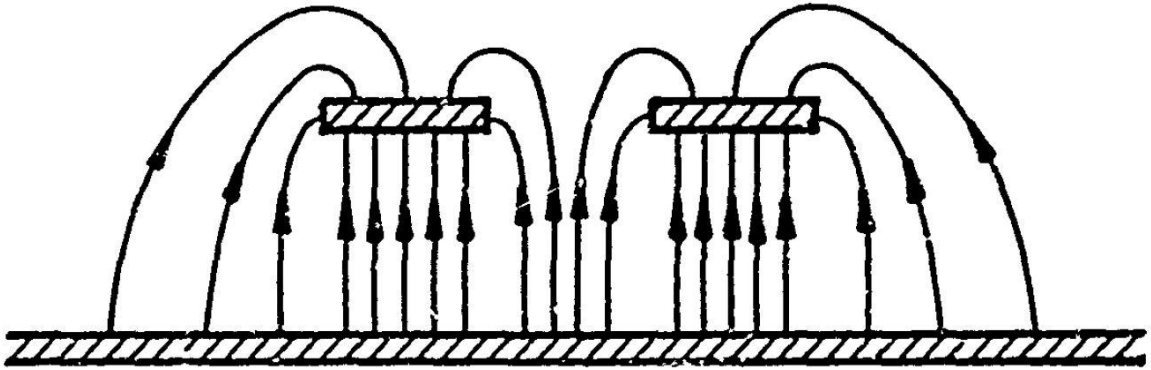

b) EVEN MODE ELECTRIC FIELD PATTERN (SCHEMATIC)

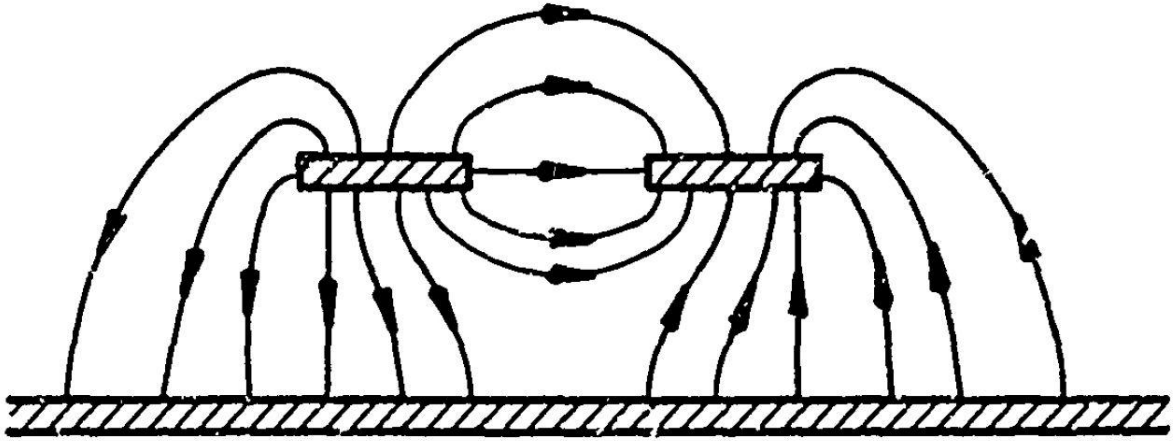

c) ODD MODE ELECTRIC FIELD PATTERN (SCHEMATIC)

Implementation in microstrip technology

- Equivalent geometry of a quasi-TEM microstrip line with effective dielectric constant homogeneous medium

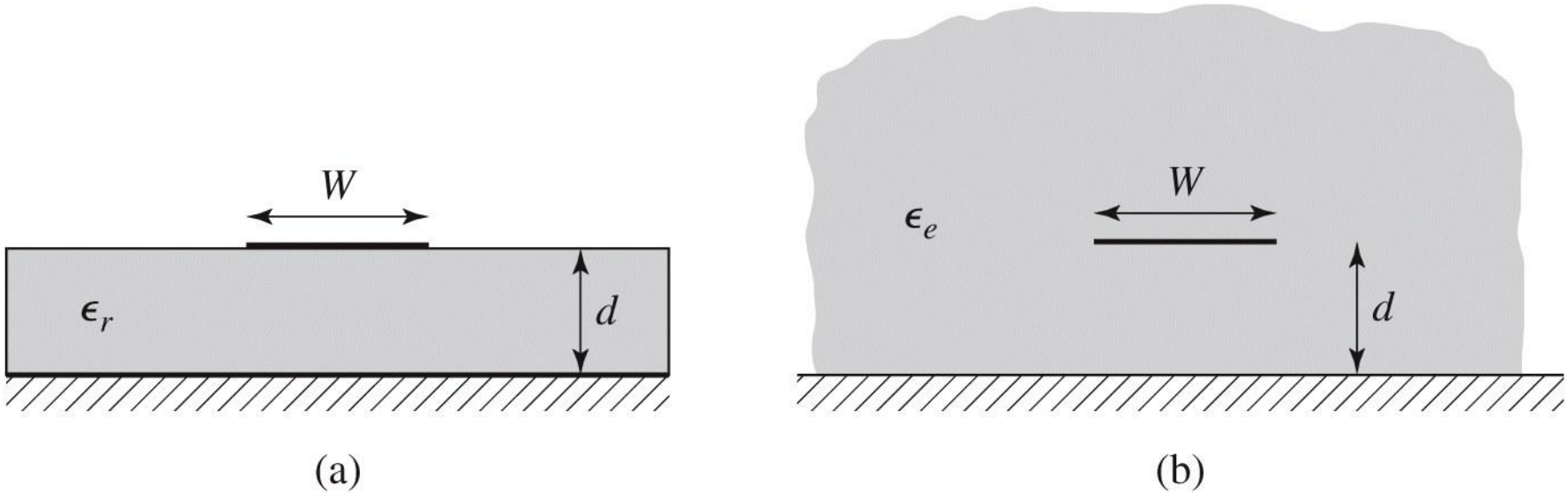

Figure 3.26

Design

- Empirical formulas

$$v_p = \frac{c}{\sqrt{\epsilon_e}},$$

$$\beta = k_0\sqrt{\epsilon_e},$$

$$\epsilon_e = \frac{\epsilon_r + 1}{2} + \frac{\epsilon_r - 1}{2}\frac{1}{\sqrt{1 + 12d/W}}.$$

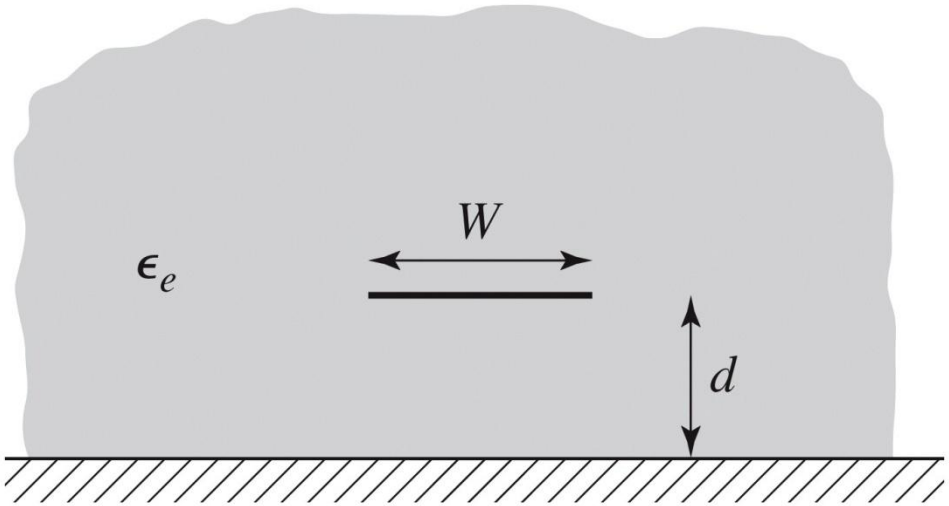

Figure 3.26b

$$Z_0 = \begin{cases} \dfrac{60}{\sqrt{\epsilon_e}} \ln\left(\dfrac{8d}{W} + \dfrac{W}{4d}\right) & \text{for } W/d \le 1 \\ \dfrac{120\pi}{\sqrt{\epsilon_e}\,[W/d + 1.393 + 0.667\ln(W/d + 1.444)]} & \text{for } W/d \ge 1. \end{cases}$$

Design

- Empirical formulas

$$A = \frac{Z_0}{60}\sqrt{\frac{\epsilon_r + 1}{2}} + \frac{\epsilon_r - 1}{\epsilon_r + 1}\left(0.23 + \frac{0.11}{\epsilon_r}\right)$$

$$B = \frac{377\pi}{2Z_0\sqrt{\epsilon_r}}.$$

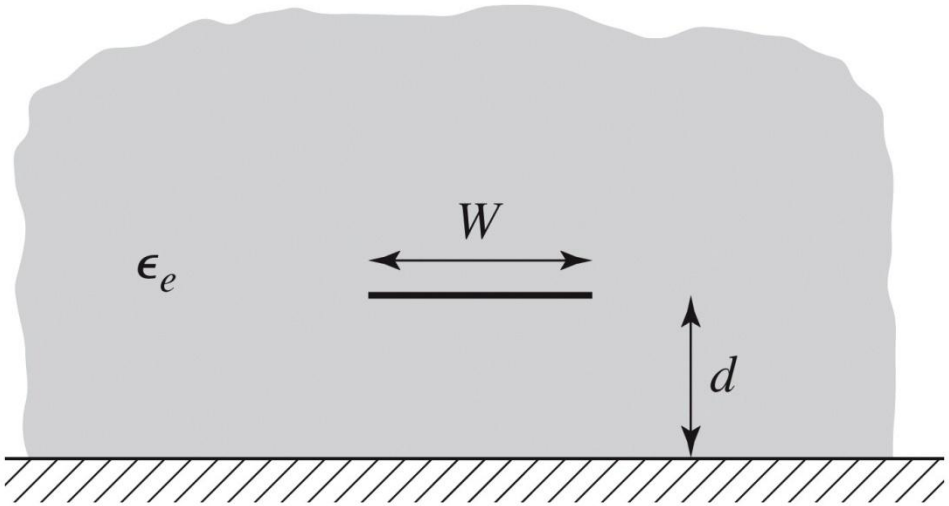

Figure 3.26b

$$\frac{W}{d} = \begin{cases} \dfrac{8e^A}{e^{2A} - 2} & \text{for } W/d < 2 \\ \dfrac{2}{\pi}\left[B - 1 - \ln(2B - 1) + \dfrac{\epsilon_r - 1}{2\epsilon_r}\left\{\ln(B - 1) + 0.39 - \dfrac{0.61}{\epsilon_r}\right\}\right] & \text{for } W/d > 2, \end{cases}$$

Characteristic impedance

- **Large impedances** require **narrow traces**
- **Small impedances** require **wide traces**

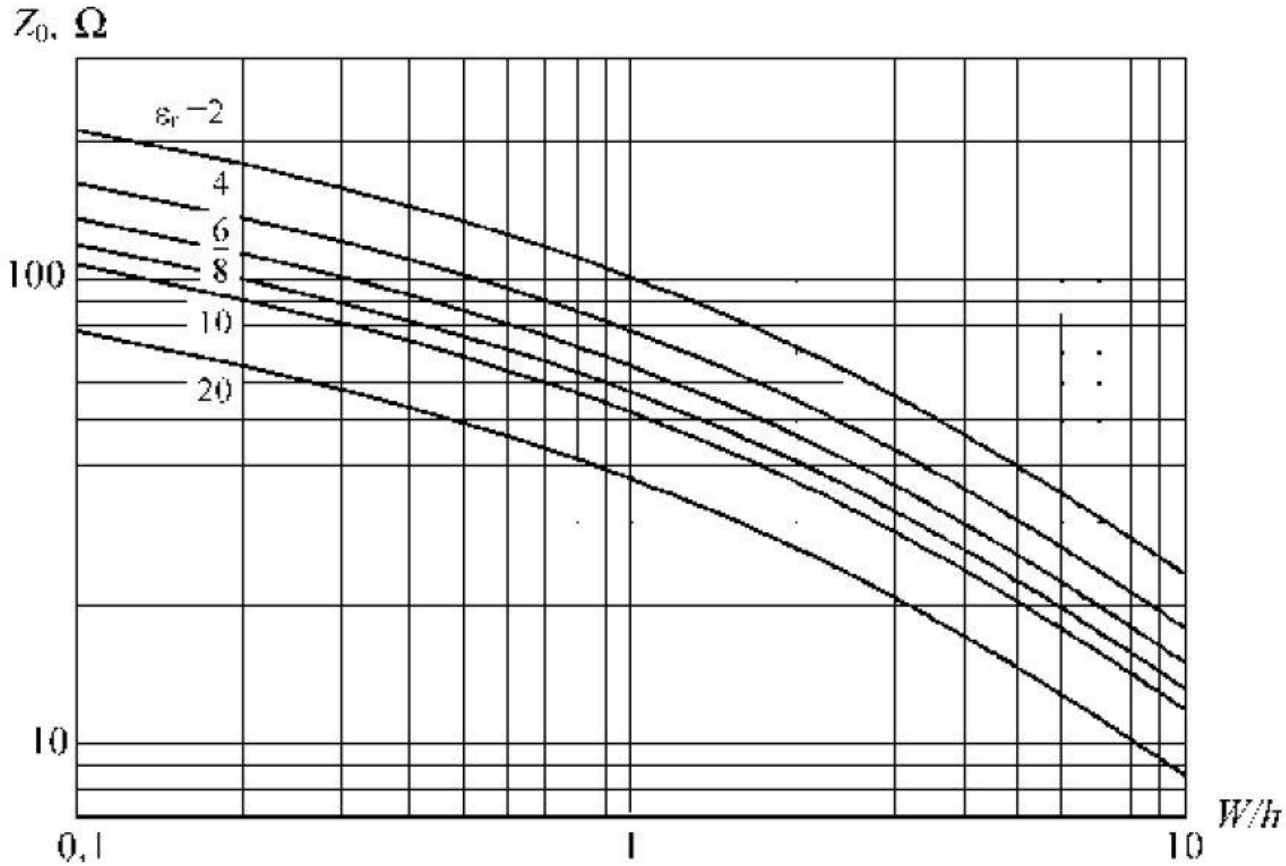

$$k_0 = \frac{2\pi f}{c}$$

$$\beta\ell = \sqrt{\epsilon_e} k_0 \ell,$$

Microstrip standardization

- Standardization
  - dimensions in **mil**
  - 1 mil = 10^{-3} inch
  - 1 inch = 2.54 cm
- Trace thickness
  - based on the weight of the deposited copper
  - oz/ft^2
  - 1oz=28.35g and 1ft=30.48cm

Greutatea cuprului depus		Grosimea stratului	
oz/ft^2	g/ft^2	inch	mm
0.5	14.175	0.0007	0.0178
1.0	28.35	0.0014	0.0356
2.0	56.7	0.0028	0.0712

Microstrip standardization

- Typically the height of the dielectric layers is also standardized in mil

Standard Thickness
RO4003C: 0.008" (0.203mm), 0.012 (0.305mm), 0.016" (0.406mm), 0.020" (0.508mm) 0.032" (0.813mm), 0.060" (1.524mm) **RO4350B**: *0.004" (0.101mm), 0.0066" (0.168mm) 0.010" (0.254mm), 0.0133 (0.338mm), 0.0166 (0.422mm), 0.020" (0.508mm) 0.030" (0.762mm), 0.060" (1.524mm)

ADS linecalc

- In schematics: >Tools>LineCalc>Start
- for Microstrip lines >Tools>LineCalc>Send to Linecalc

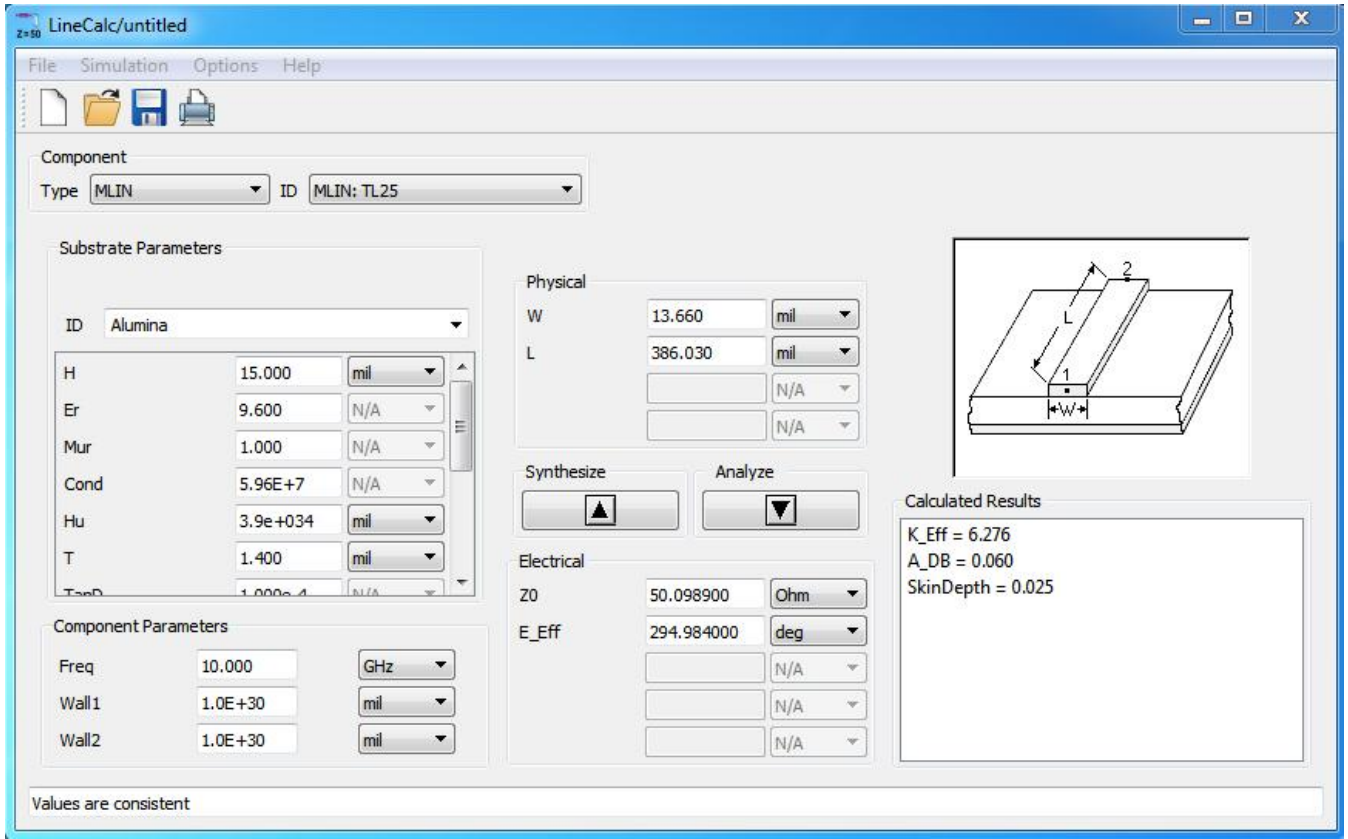

ADS linecalc

- 1. Define substrate (receive from schematic)
- 2. Insert frequency
- 3. Insert input data
  - Analyze: W,L → Zo,E or Ze,Zo,E / at f [GHz]
  - Synthesis: Zo,E → W,L / at f [GHz]

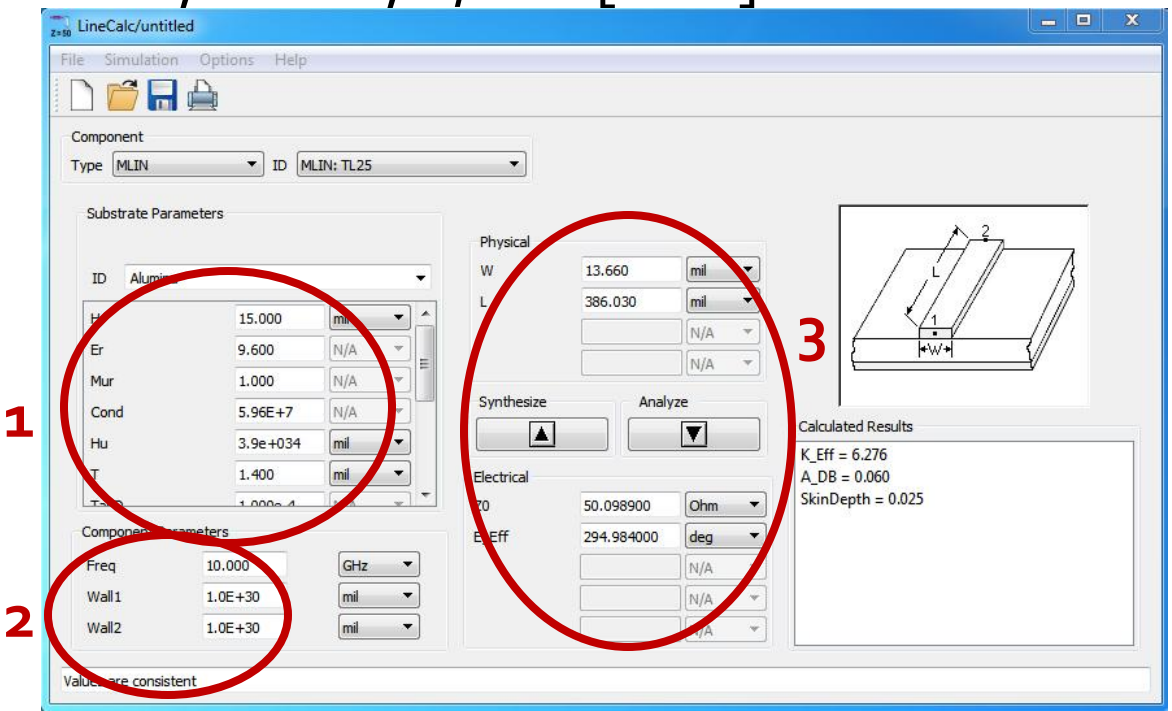

ADS linecalc

- Can be used for:
  - microstrip lines MLIN: W,L ⇔ Zo,E
  - microstrip coupled lines MCLIN: W,L,S ⇔ Ze,Zo,E

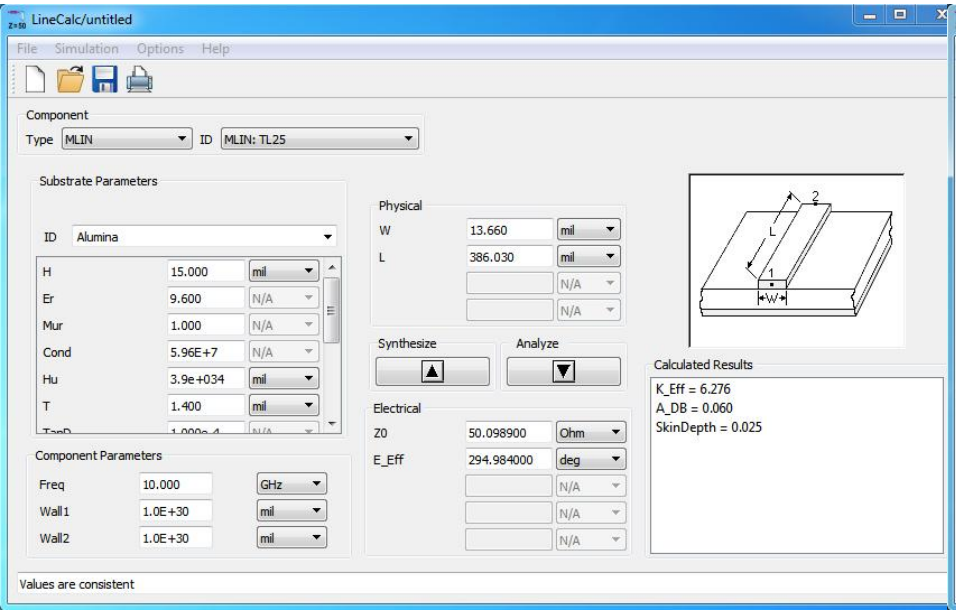

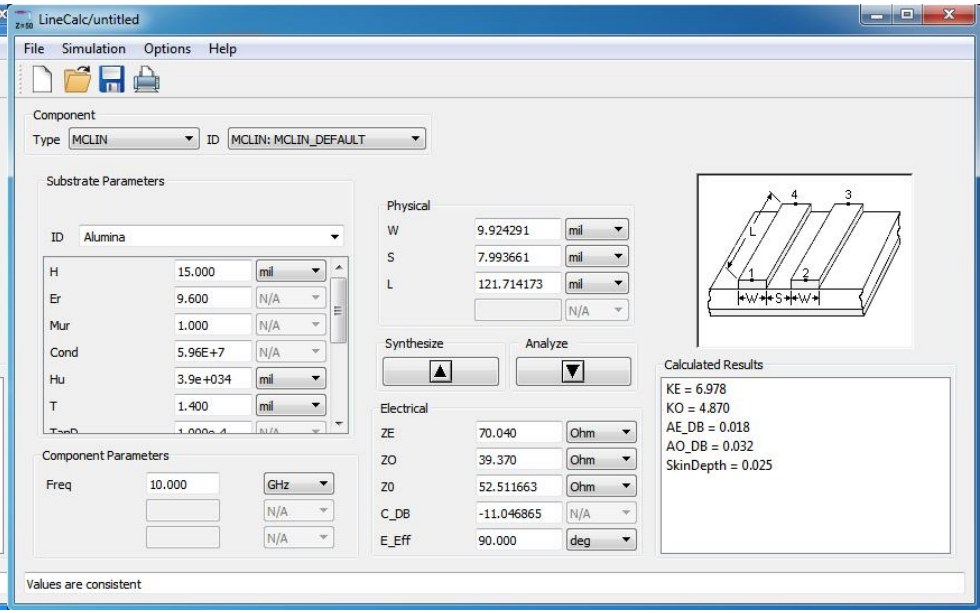

ADS linecalc

LineCalc/untitled

File Simulation Options Help

Component

Type MCLIN ID MCLIN: MCLIN_DEFAULT

Substrate Parameters

ID Alumina

H	15.000	mil
Er	9.600	N/A
Mur	1.000	N/A
Cond	5.96E+7	N/A
Hu	3.9e+034	mil
T	1.400	mil
TanD	1.000e-4	N/A

Component Parameters

Freq	10.000	GHz
		N/A
		N/A

Physical

W	9.924291	mil
S	7.993661	mil
L	121.714173	mil
		N/A

Synthesize Analyze

Electrical

ZE	70.040	Ohm
ZO	39.370	Ohm
Z0	52.511663	Ohm
C_DB	-11.046865	N/A
E_Eff	90.000	deg

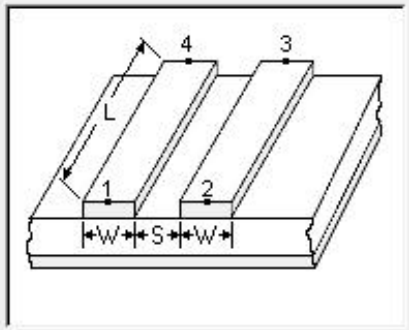

Calculated Results

KE = 6.978
KO = 4.870
AE_DB = 0.018
AO_DB = 0.032
SkinDepth = 0.025

Values are consistent

Transmission lines

- http://rf-opto.etti.tuiasi.ro
- Transmission lines / Rogers
  - more precise formulas including
    - t, trace thickness
    - f, frequency
  - formulas for
    - microstrip
    - strip
    - coupled lines

Implementation in microstrip technology

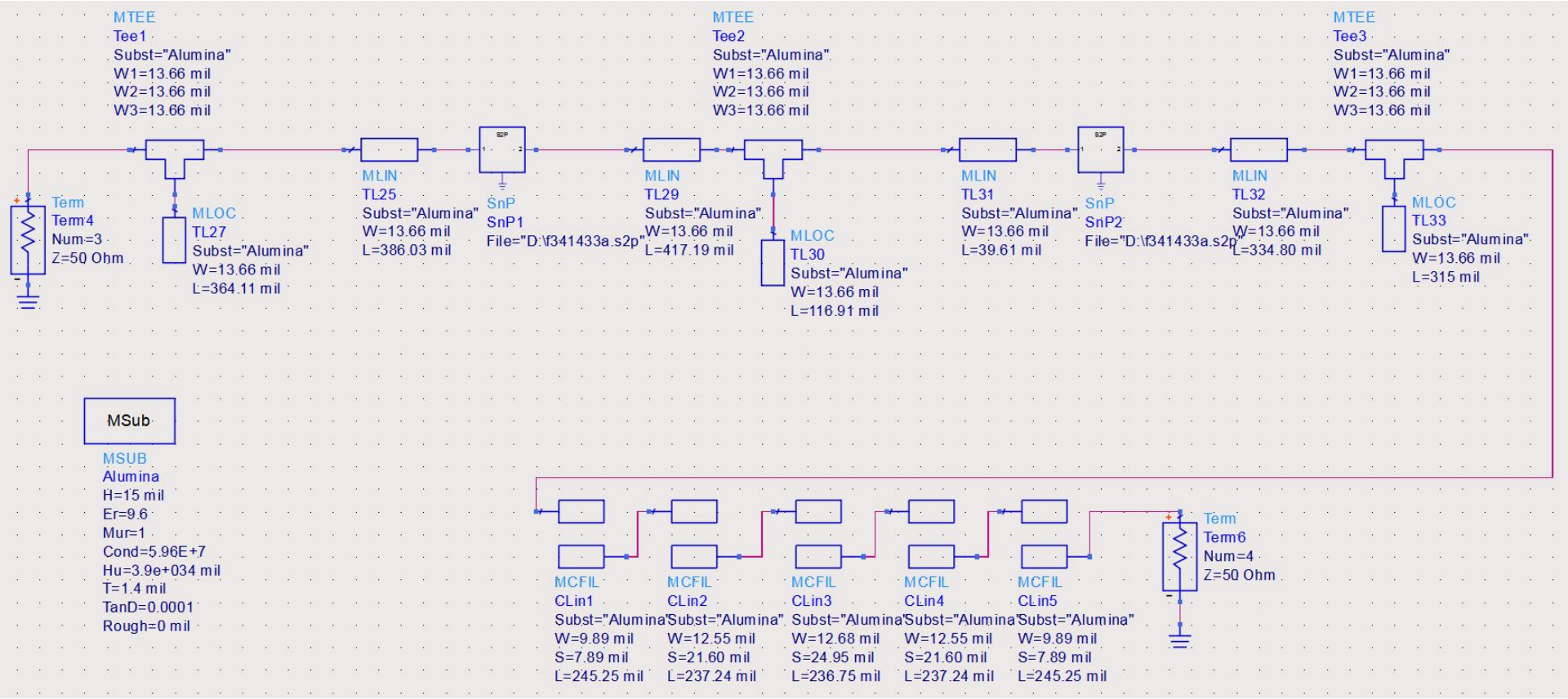

Implementation in microstrip technology

- On all schematics you must have an substrate model/component
- Miscrostrip lines and coupled lines are computed in Linecalc for the same substrate

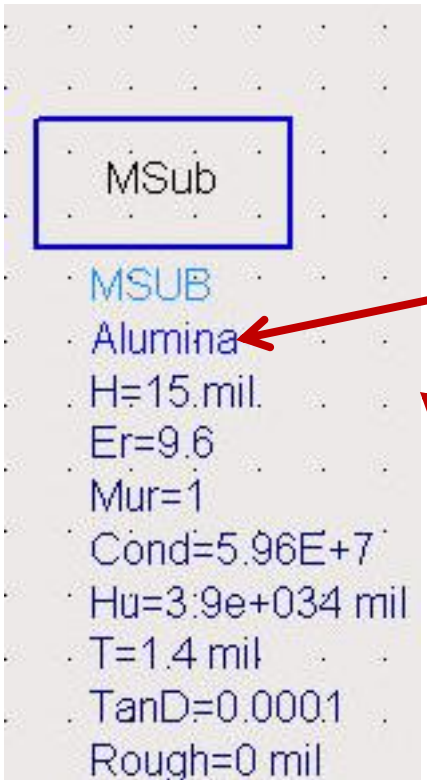

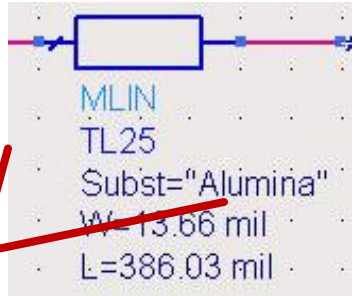

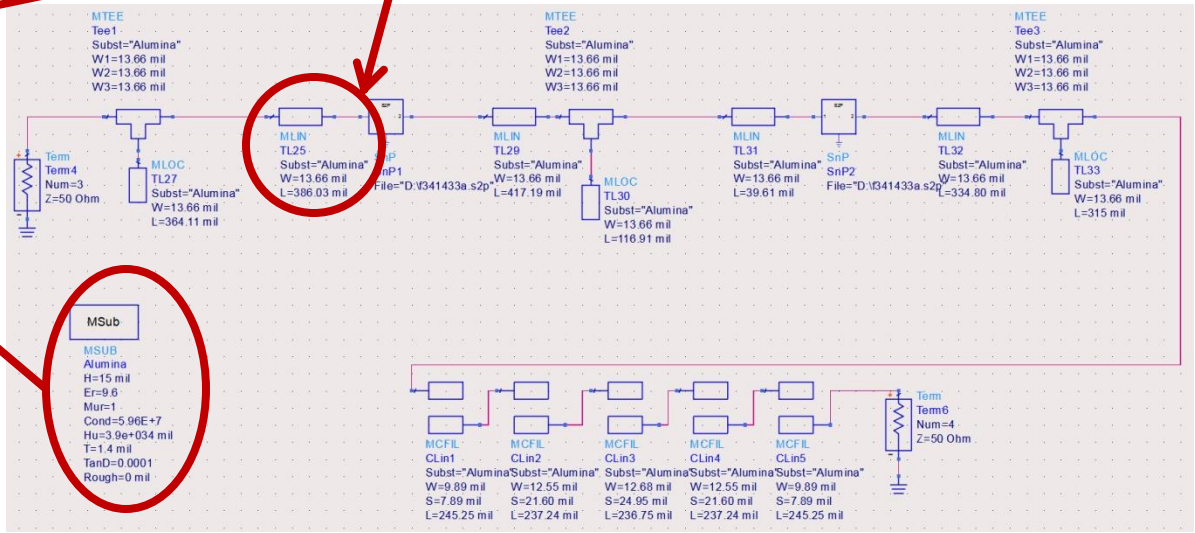

Implementation in microstrip technology

- We use components from the "Transmission Lines – Microstrip" pallete
  - MSUB - substrate
  - MLIN – series line
  - MLOC – open-circuit shunt stub
  - MTEE – modeling of T junction (shunt stub connection to main line)
  - MCFIL – coupled line filter section (more accurate model than MCLIN – takes into account that two adjacent sections are physically close)

Implementation in microstrip technology

- Attention is required when inserting parameters for MTEE and MCFIL by checking in the schematic the width of the lines connected to each port.

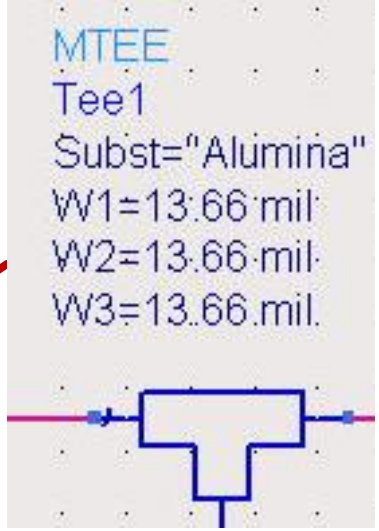

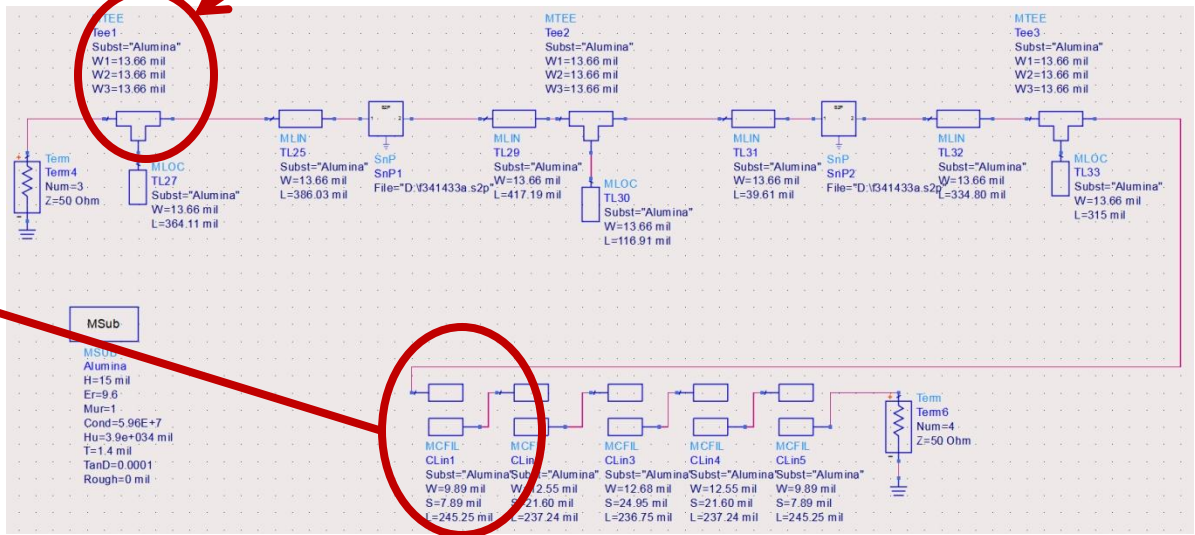

Implementation in microstrip technology

- Usually there is a shift of the transfer function (red) towards lower frequencies compared to the ideal model (blue)
  - due to the MCFIL/MCLIN difference
- Tune the length of filter elements to move the filter bandwidth around fo = 5GHz

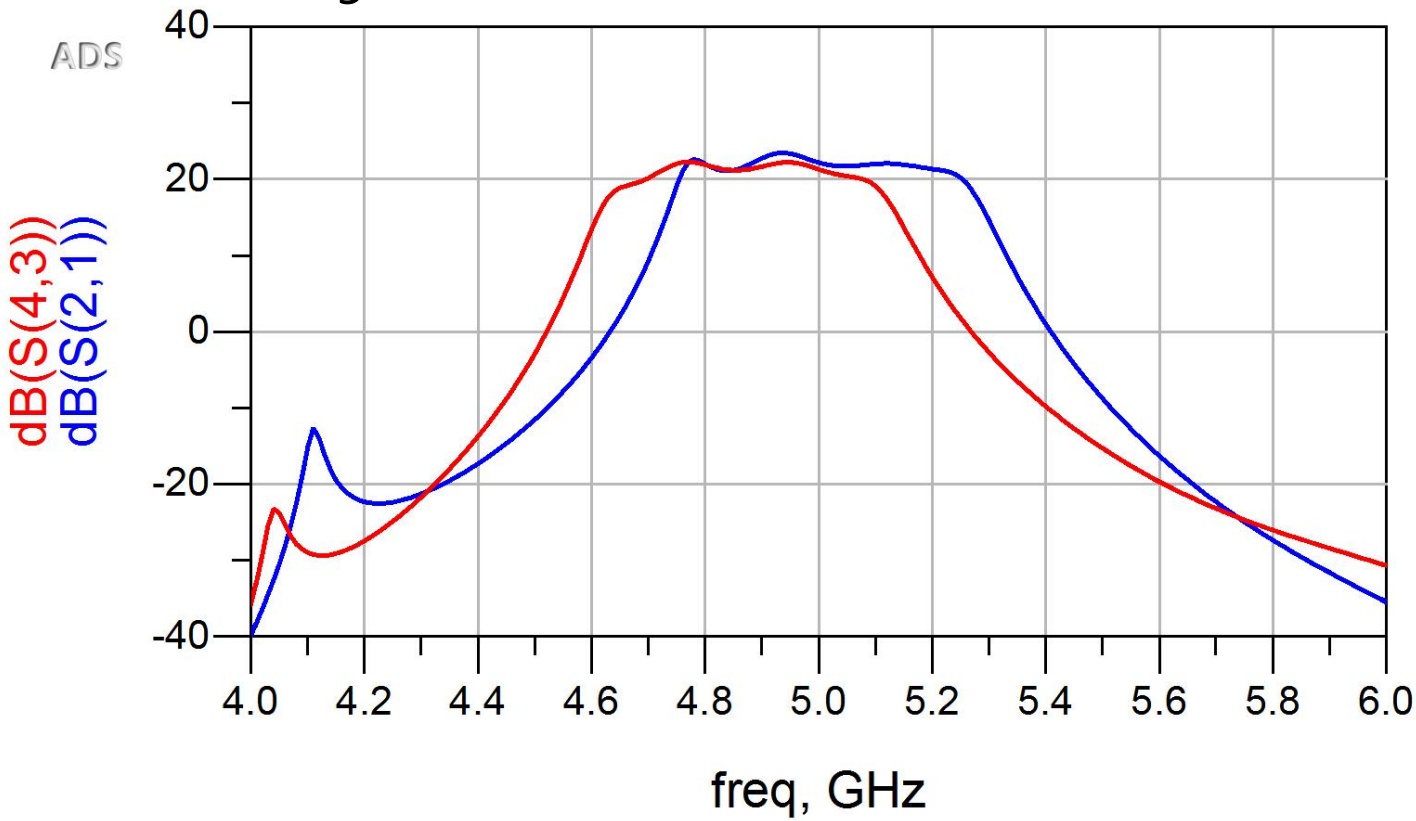

DC Bias

- http://rf-opto.etti.tuiasi.ro
- Agilent Application Notes
  - decoupling signal from DC Bias circuitry
  - DC Bias circuits for microwave transistors
- Appcad has tools for designing DC Bias circuits

DC Bias

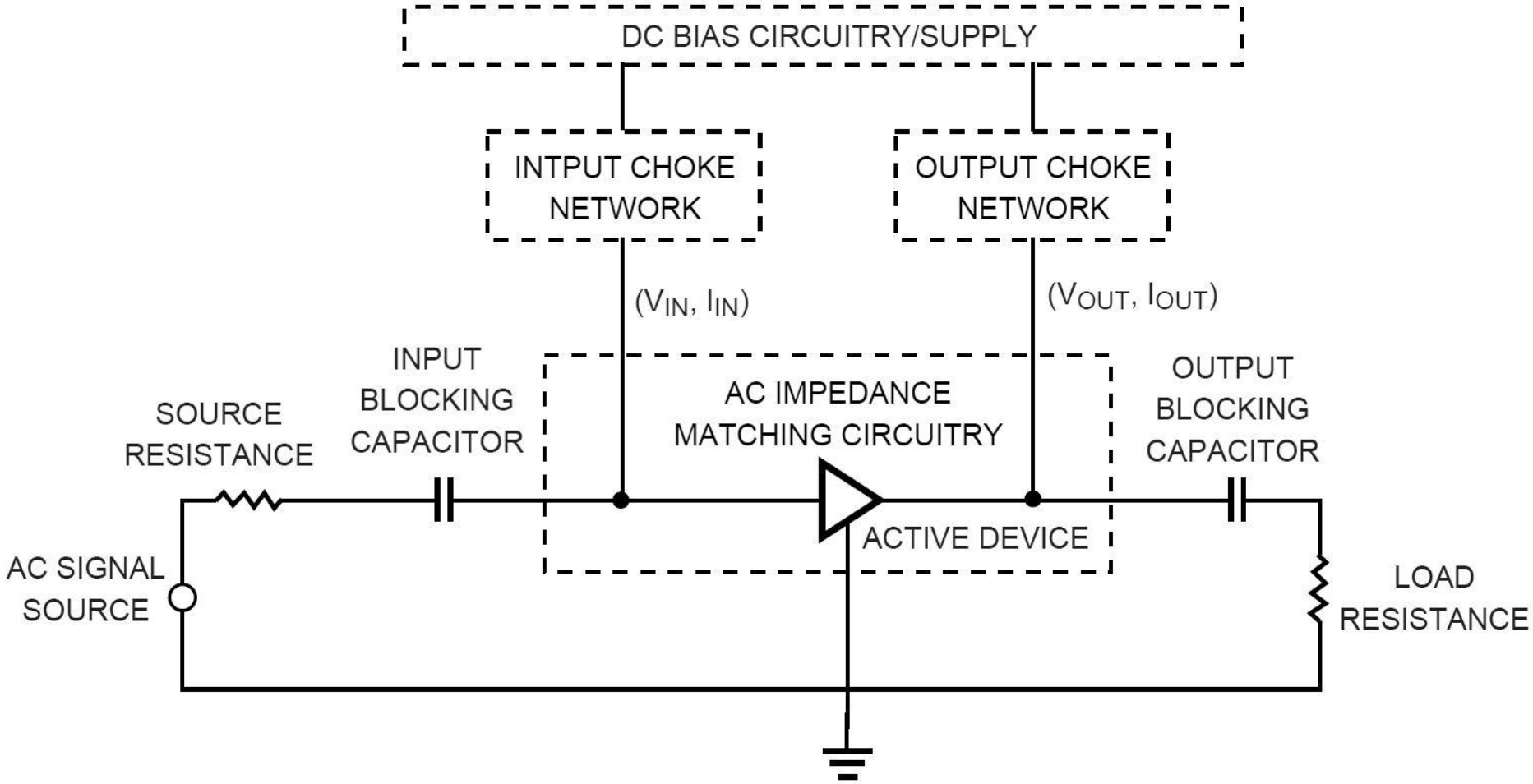
DC BIAS CIRCUITRY/SUPPLY
INTPUT CHOKE NETWORK
OUTPUT CHOKE NETWORK
(VIN, IIN)
(VOUT, IOUT)
INPUT BLOCKING CAPACITOR
SOURCE RESISTANCE
AC IMPEDANCE MATCHING CIRCUITRY
OUTPUT BLOCKING CAPACITOR
ACTIVE DEVICE
AC SIGNAL SOURCE
LOAD RESISTANCE

DC Bias, typical choke

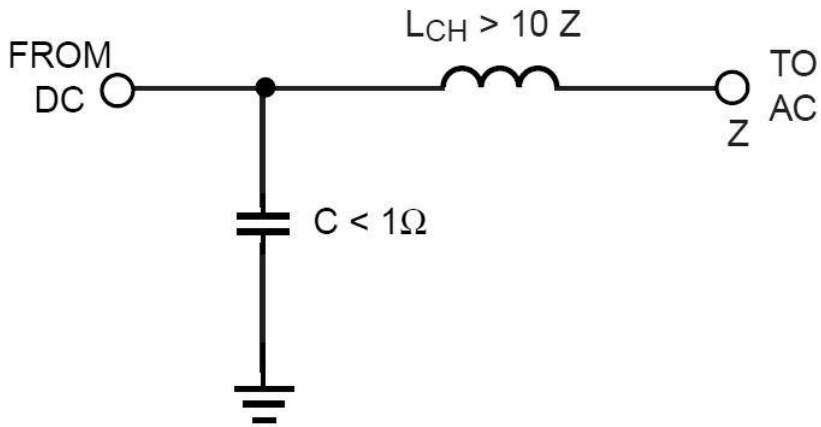

CURRENT CONTROLLED

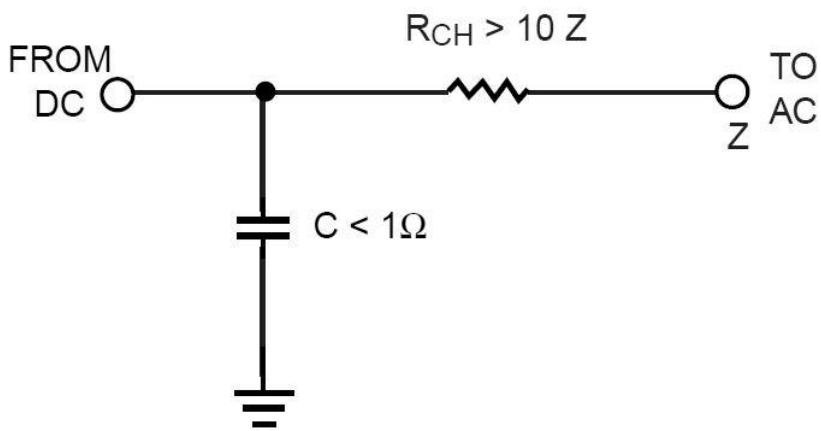

VOLTAGE CONTROLLED
(FET GATE)

DC Bias, typical schematics/values

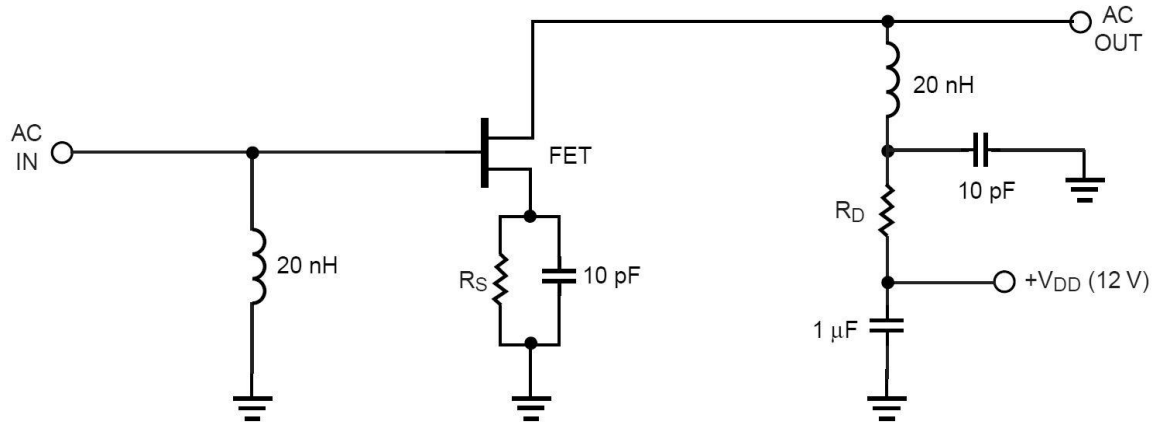

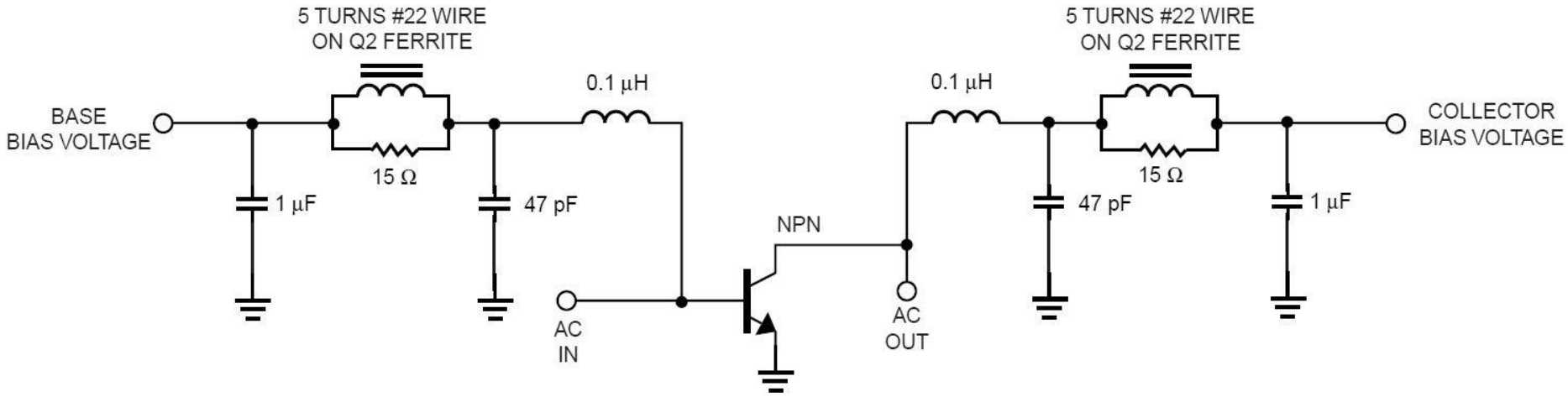

DC Bias, elements in E/S

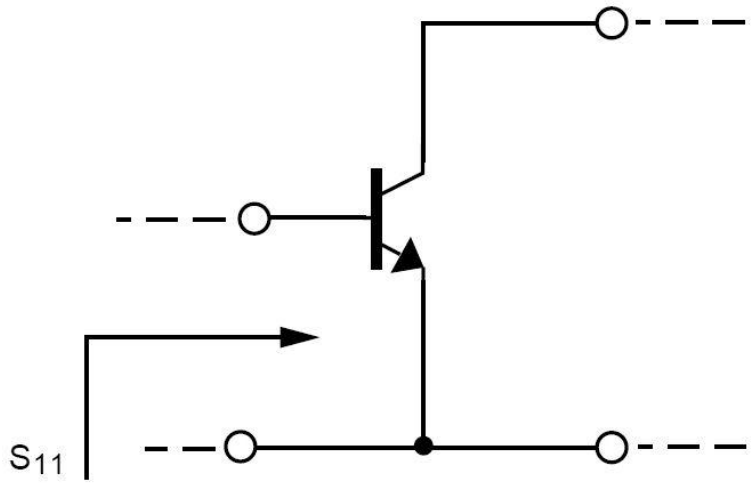

S_{11} (AT 4 GHz) = 0.52 ∠ 154°

S_{11} (AT 0.1 GHz) = 0.901 ∠ –14.9°

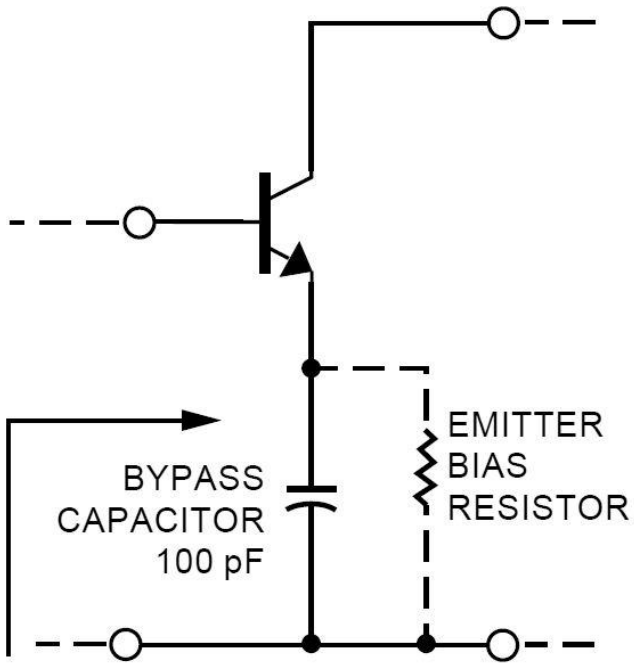

S'_{11} (AT 4 GHz) = 0.52 ∠ 154° UNCHANGED AT 4 GHz

S'_{11} (AT 0.1 GHz) = 1.066 ∠ -8.5° $|S_{11}|>1$ AT 0.1GHz

DC Bias, bipolar transistors

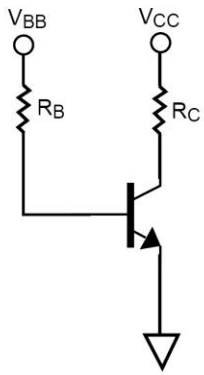

NON-STABILIZED

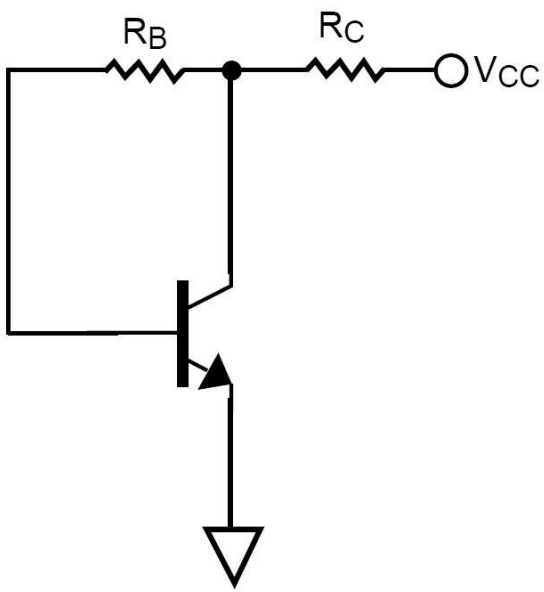

VOLTAGE FEEDBACK

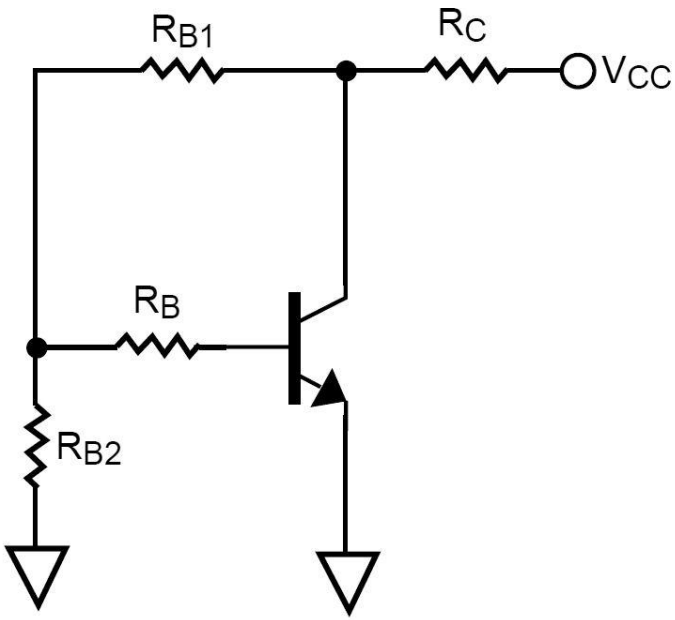

VOLTAGE FEEDBACK AND CONSTANT BASE CURRENT SOURCE

Example project

- Unify the two schematics
  - L8 – amplifier
  - L9 – filter

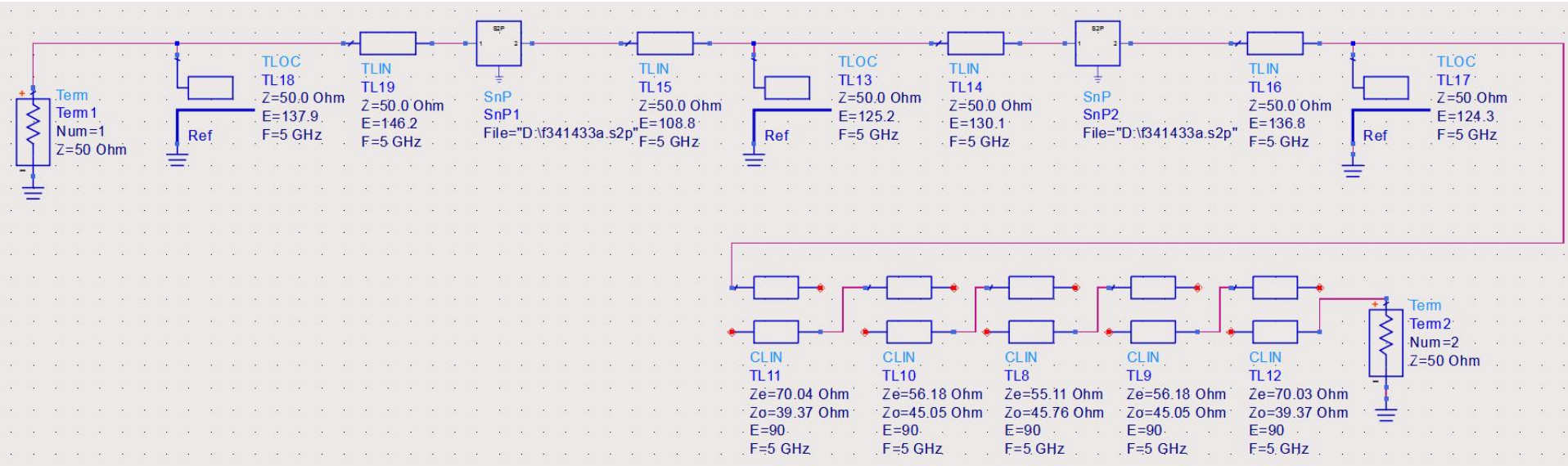

Result (unbalanced)

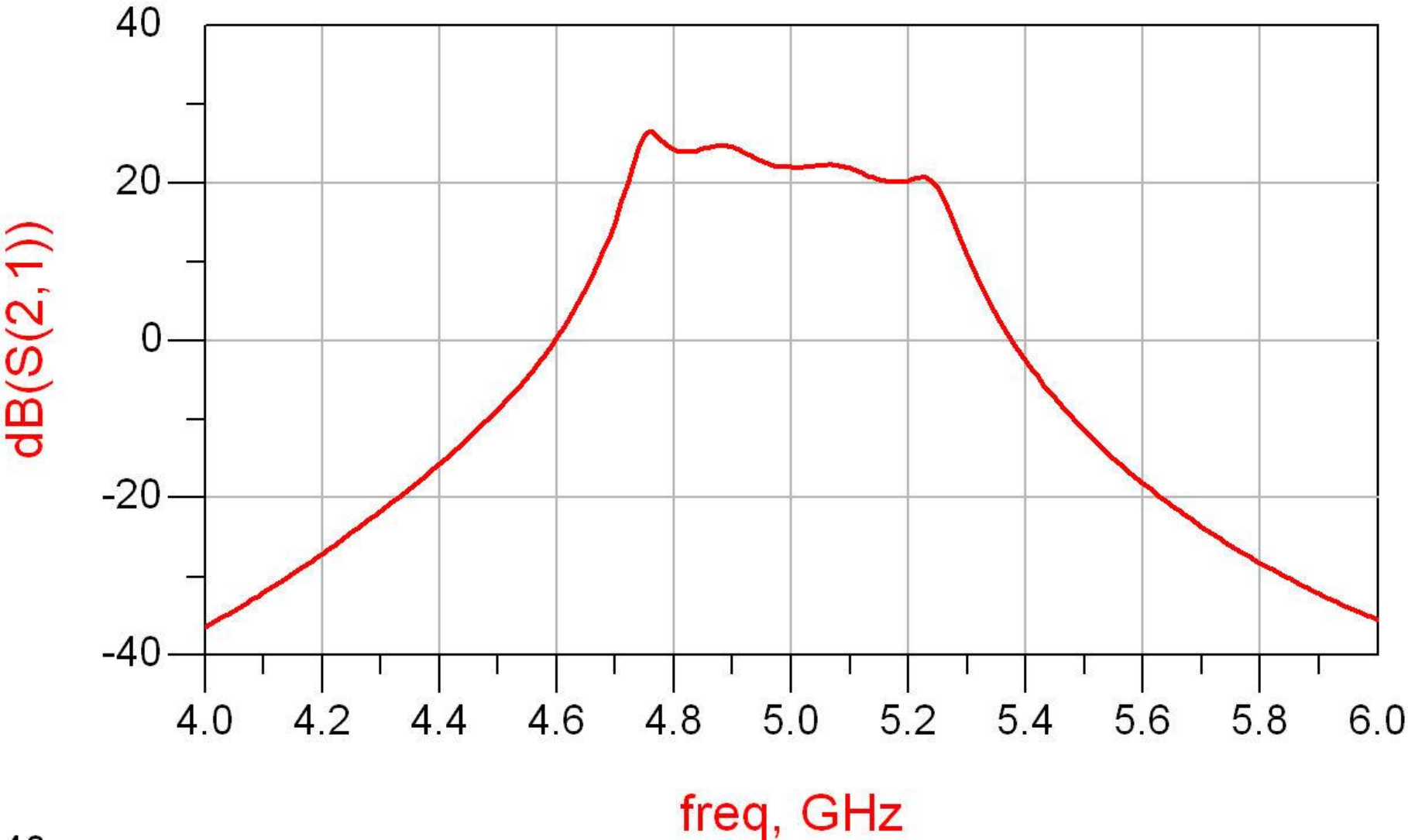

Result (unbalanced)

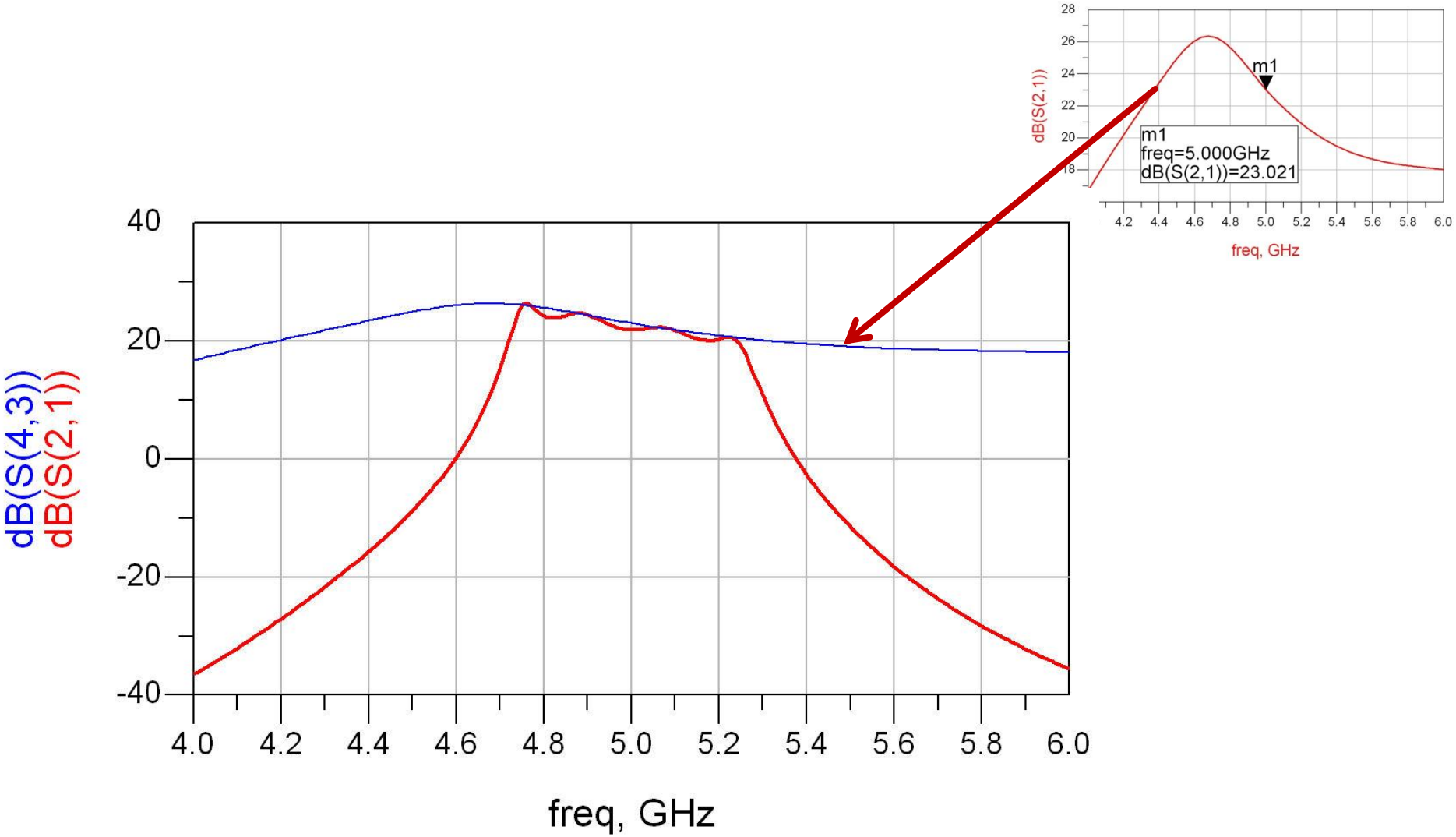

Result (~periodic in frequency)

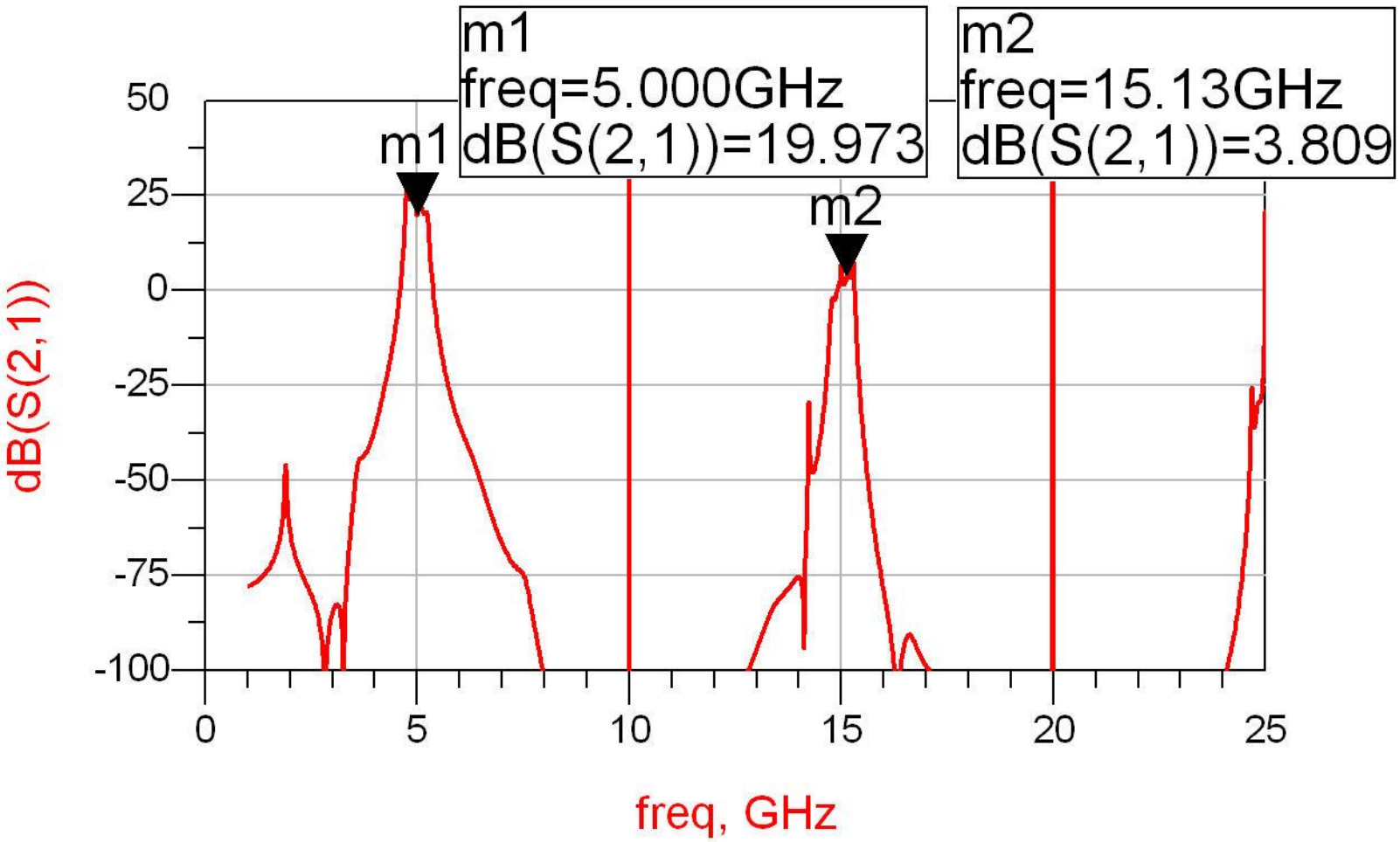

Tune -> balance

- purpose: balance the gain characteristic of the amplifier (maximum at design frequency)
  - favor tuning lines at the end of the amplifier
    - eliminate/minimize effect of the tune on noise

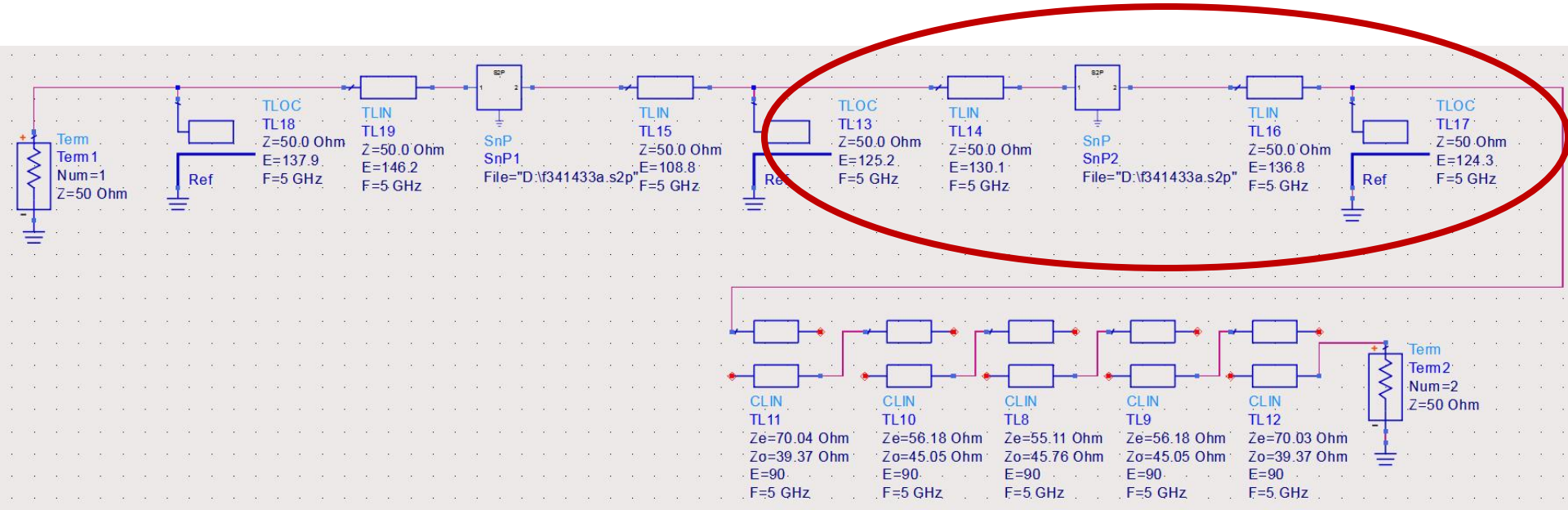

Tune -> balance, result

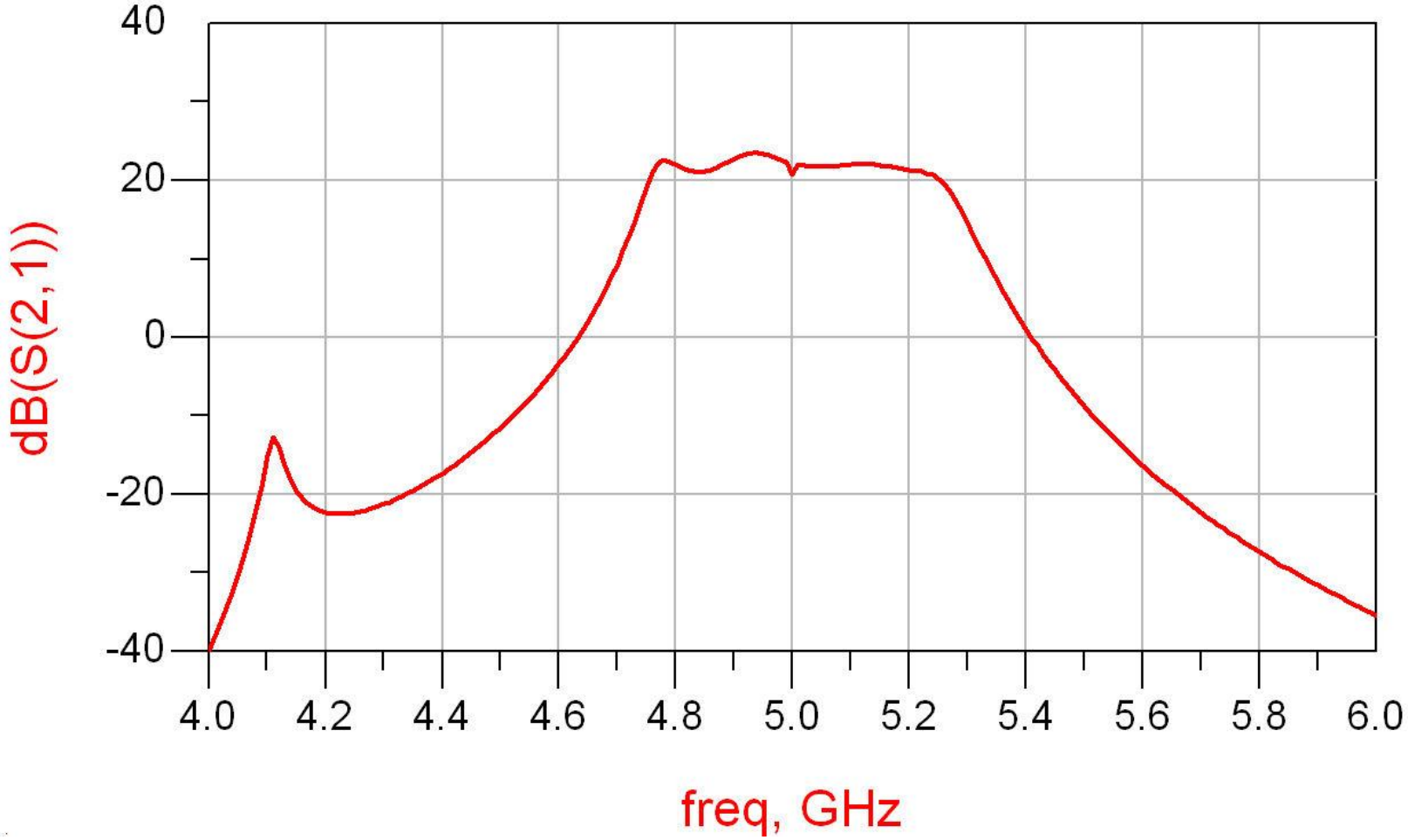

Amplifier, Filter, Total

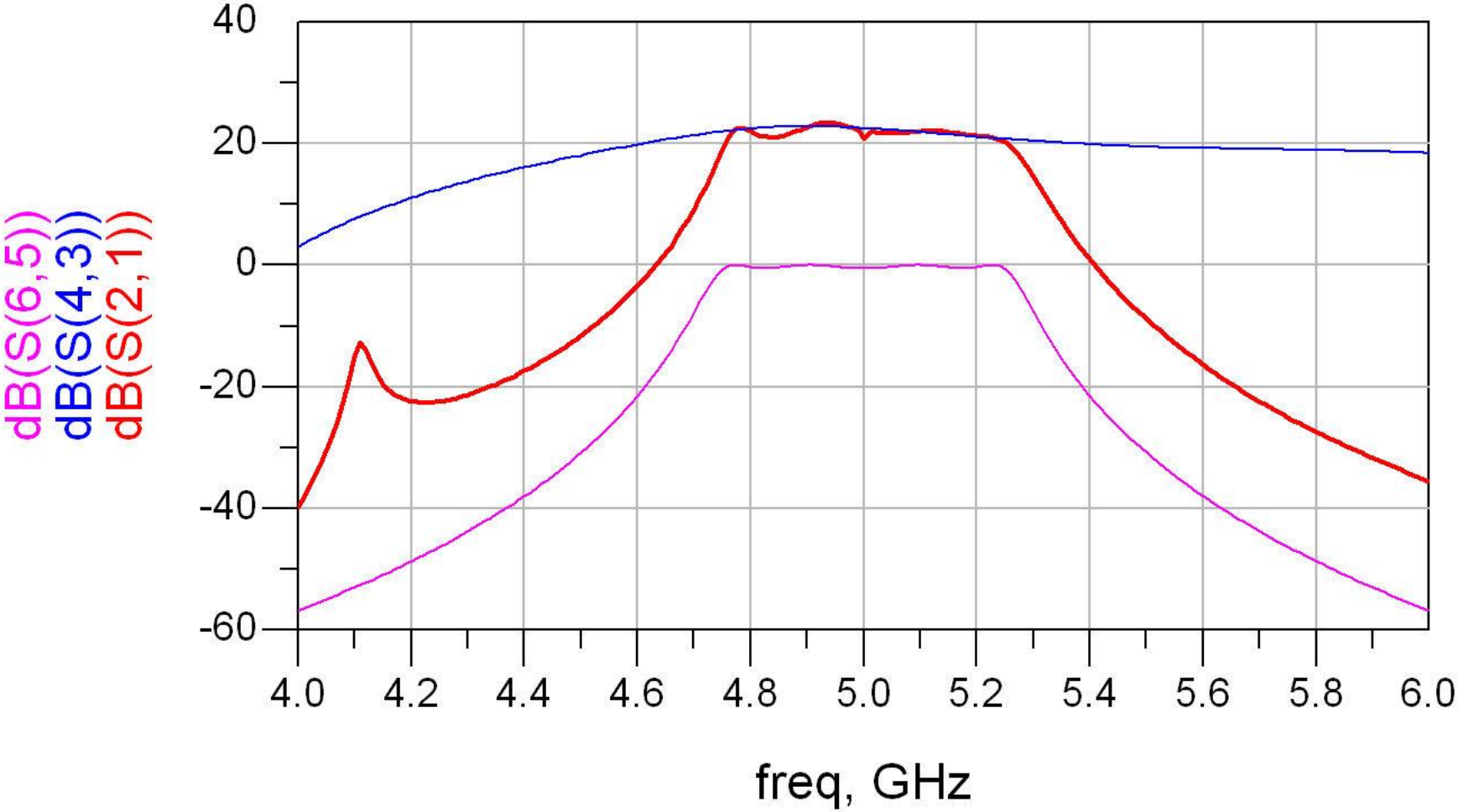

DC Bias elements in ADS schematic

- Insert L (RF chokes) and C (decoupling)
- additional 50Ω connection lines
  - source
  - load
  - between blocks

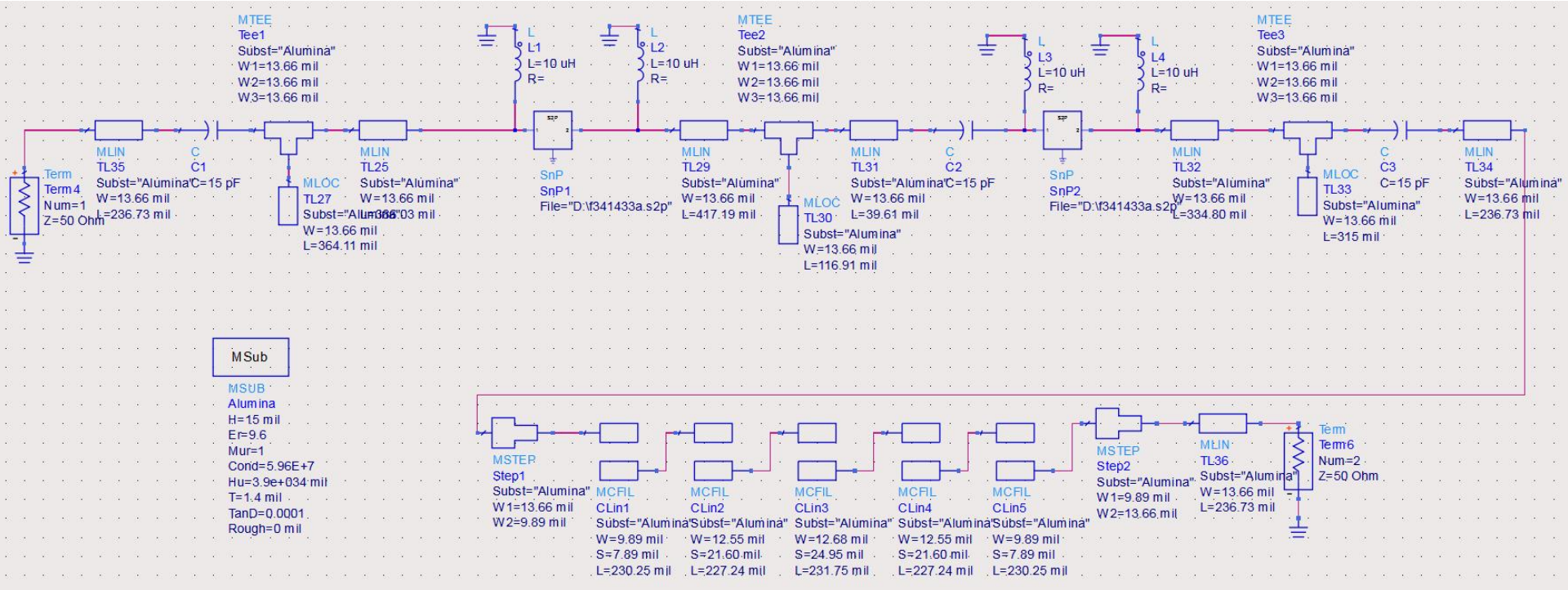

Gain -> Tune/Optimization

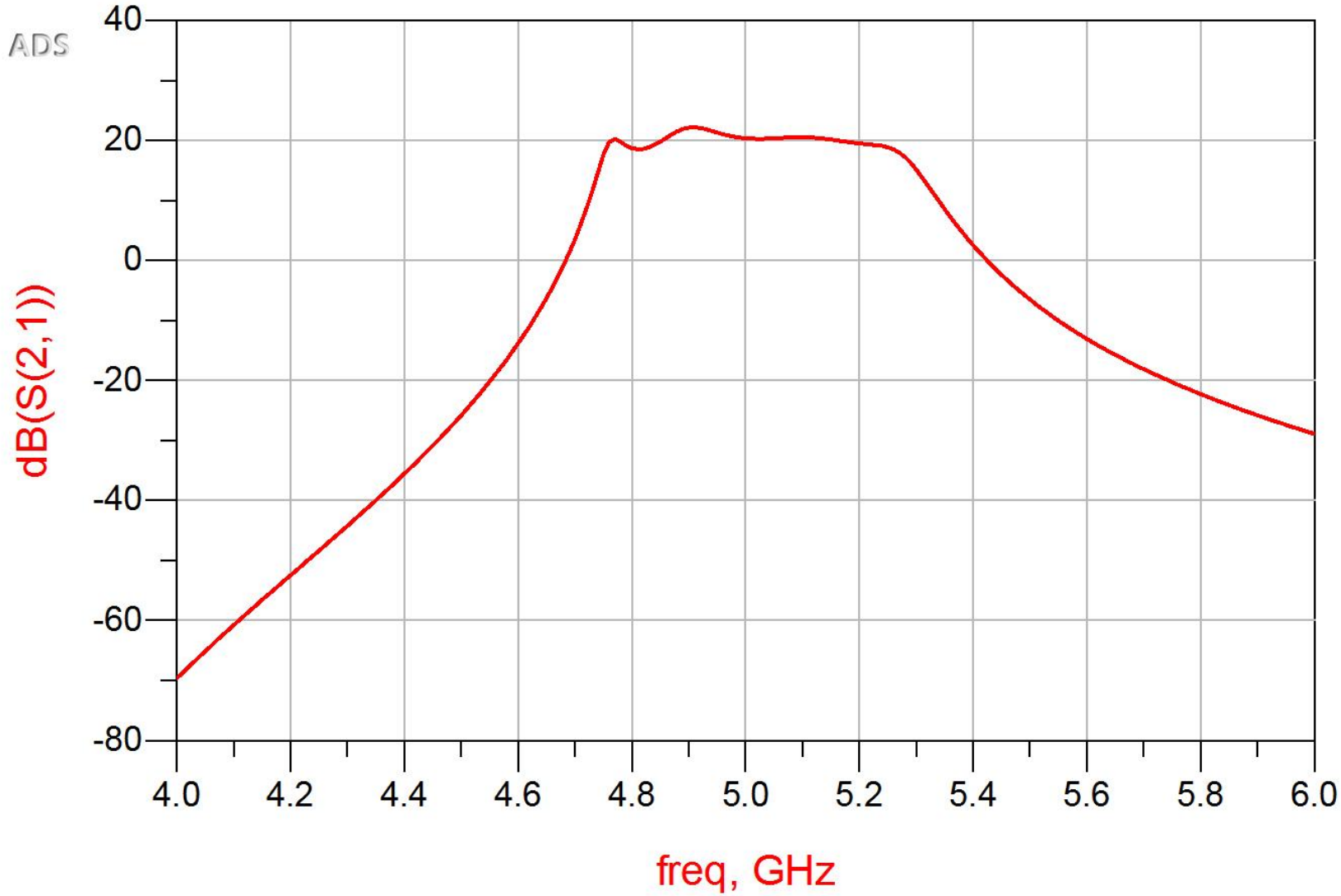

Final result (Gain)

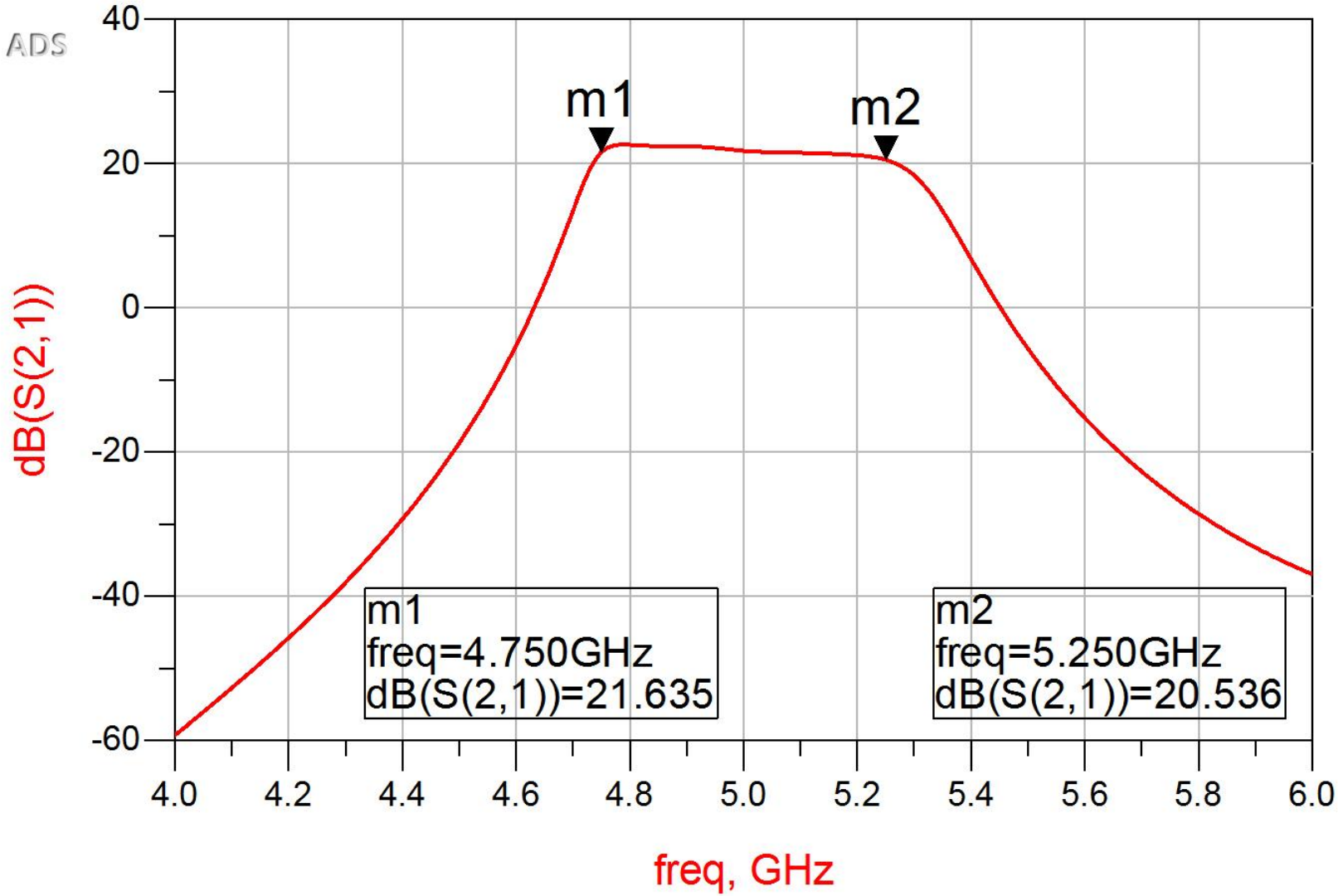

Final result (Noise)

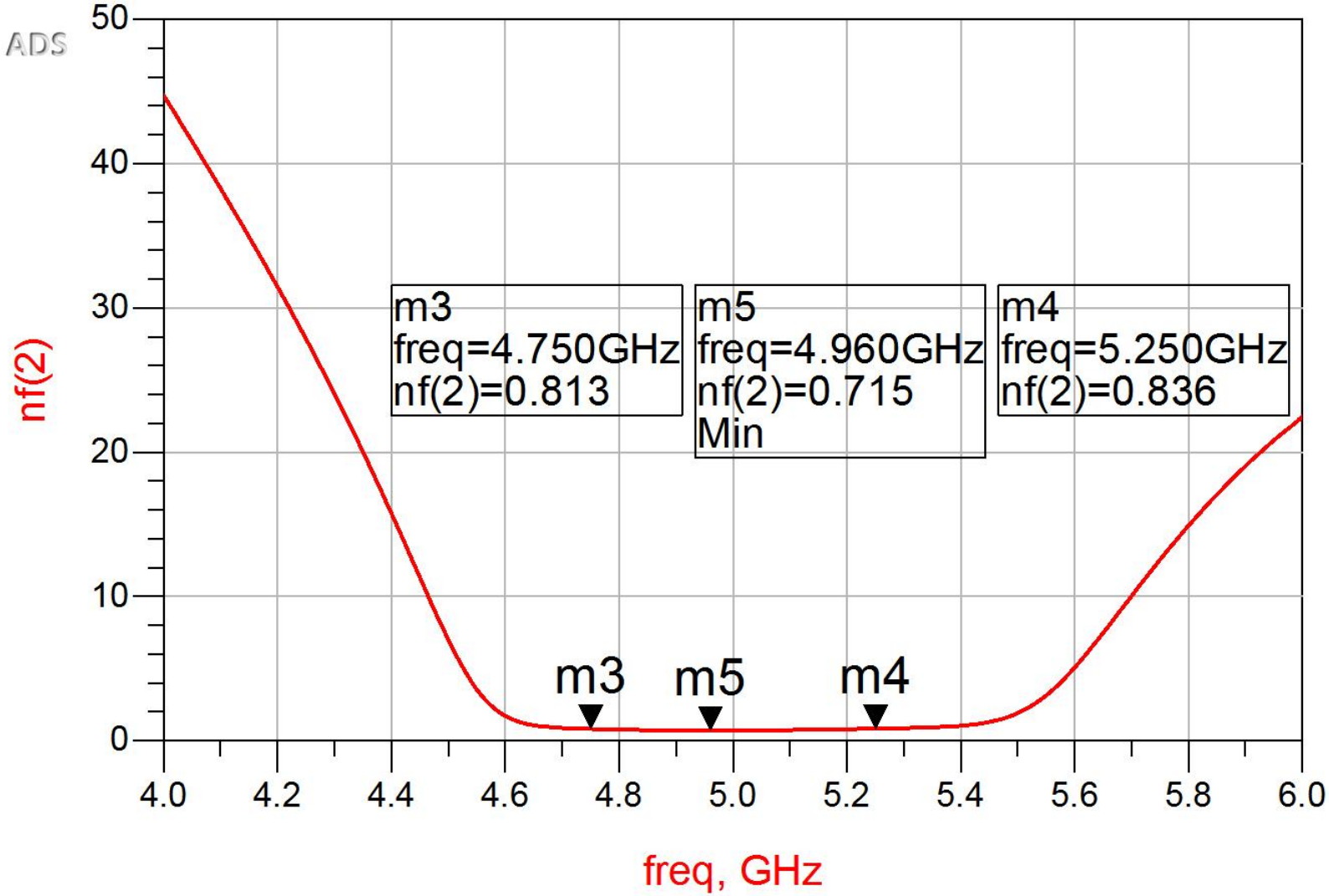

Layout (Example)

- Temporary replacement of the transistors and lumped elements (LC) with elements for which ADS has case information

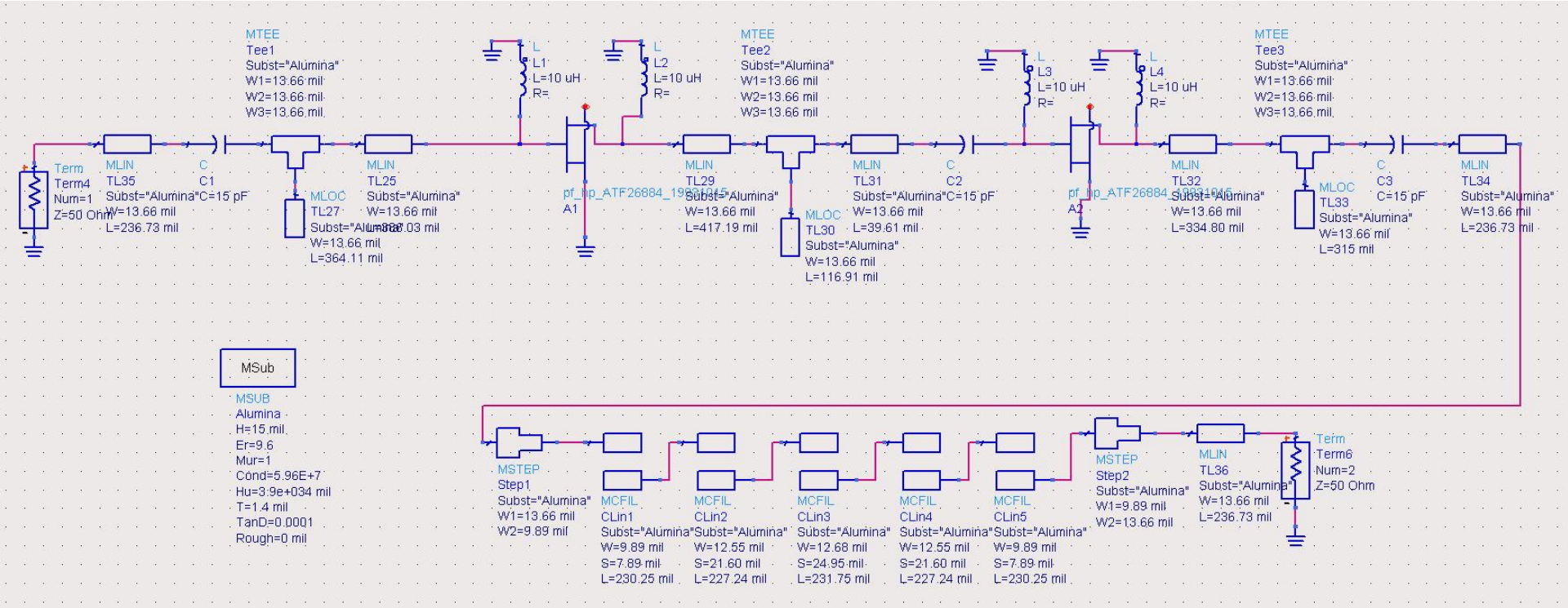

Layout (Example)

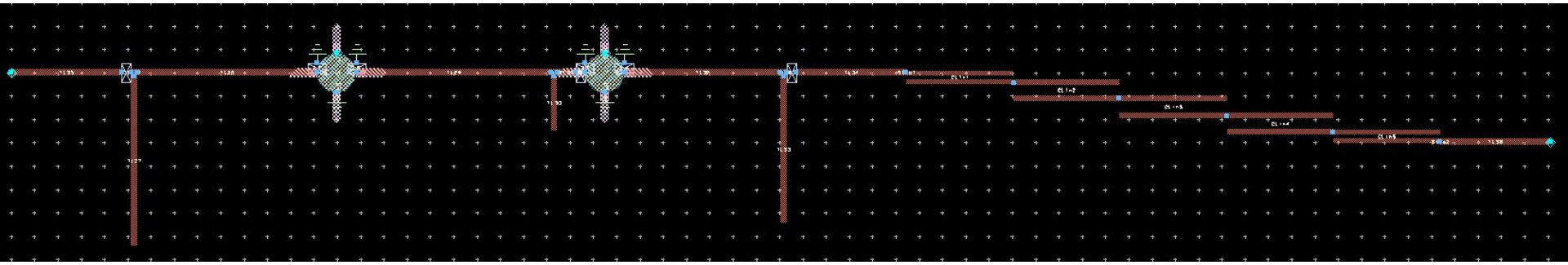

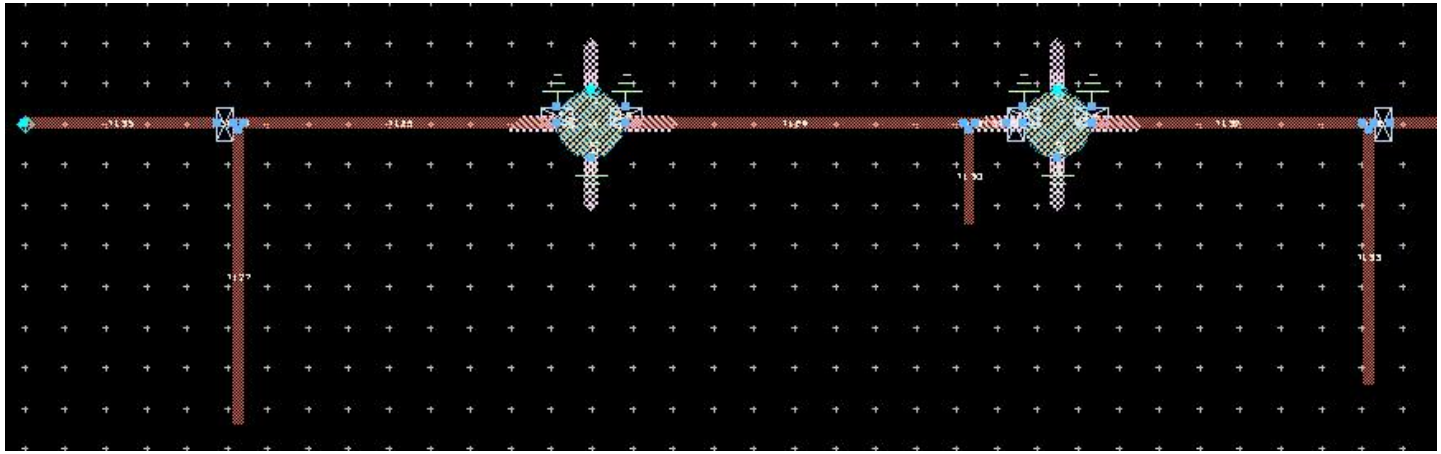

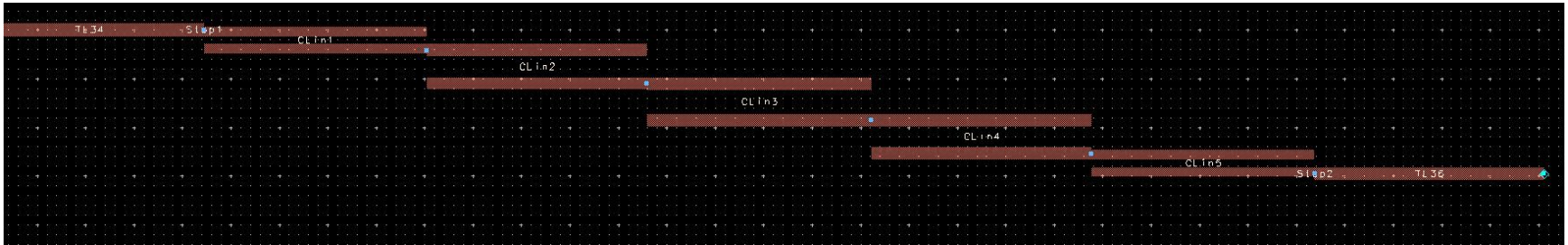

Contact

- Microwave and Optoelectronics Laboratory
- http://rf-opto.etti.tuiasi.ro
- rdamian@etti.tuiasi.ro